POTTERTON
COMMERCIAL

Works every time.

SIRIUS FS

Installation & Servicing Instructions

Direct Fired High Efficiency Boiler

Models
SIRIUS FS400
SIRIUS FS525

www.pottertoncommercial.co.uk

This manual must be kept with the appliance

M7248

Reliability

Our boilers are all factory tested before sale and we will commission them for you to make sure they work reliably and efficiently. We also offer parts and labour warranties for extra peace of mind.

Efficiency

Our modulating boilers will meet the variable heating requirements of any building, optimising energy efficiency and running costs.

Engineering quality

All of our products are manufactured using tried and tested technology, and meet the latest ISO standards.

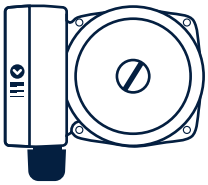

Genuine parts

We support parts for all our boilers for up to 10 years after they have stopped being sold, so you know your boiler will be supported.

Online support

Our website contains all the information you need, including BIM and CAD files, brochures, technical specification sheets, case studies, installation manuals and user guides.

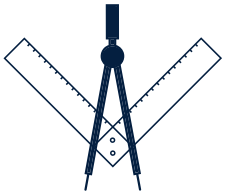

Specification and sales support

Our technical support experts can guide you through building regulations, legislation and building service engineering standards. Our dedicated sales team is never more than a phone call away.

Table of Contents

Ref	Subject	Page
1.0	**General Information**	
1.1	Description of appliance	3
1.2	Symbols used in this guide	4
1.3	For whom is this manual intended?	4
2.0	**Safety**	
2.1	Usage and competency	5
2.2	General safety	5
2.3	Regulations and standards	6
2.4	CE Marking	7
3.0	**Technical Data**	
3.1	Dimensions and connections	8
3.2	Performance data	10
3.3	Sensor values	11
3.4	Wiring diagrams	12
4.0	**Prior to Installation**	
4.1	Unpacking the boiler	14
4.2	Locating the boiler	14
4.3	Power connection requirements	16
4.4	Requirements for heating circuit water	16
4.5	Hydraulic pump requirements	18
4.6	Application examples	20
5.0	**Installation**	
5.1	Water connections to low temperature circuits	23
5.2	Condense connections	23
5.3	Electrical connections	24
5.4	Installing room and outside sensors	29
5.5	Flue and ventilation	33
5.6	Gas connections and tightness testing	37
6.0	**Commissioning**	
6.1	Switching on	38
6.2	Engineers tools (Siemens) and use of Controller stop mode	38
6.3	Checking and adjusting CO2 levels	39
6.4	Decomissioning and Disposal	40
6.5	Controls and basic settings	41
6.6	Error messages	44
6.7	Final checks & User handover	46

Ref	Subject	Page

7.0 Maintenance

7.1 Routine Inspection intervals & requirements 47
7.2 Preparation for component access 50
7.3 Removing and changing components 52
7.4 Component parts list 61
7.5 Component illustrations 63
7.6 Recommended parts list 66
7.7 Fault code table 69

Potterton Commercial's policy is one of continuous improvement, and therefore the information in this manual, whilst correct at the time of publication, may be subject to revision without prior notice.

1.0 GENERAL INFORMATION

1.1 DESCRIPTION OF APPLIANCE

1.1.1 General

The FS400 or FS525 model is a gas fired, low NOx, dual burner boiler system, for the supply of low temperature hot water for space heating and primary hot water. The Sirius FS range of boilers have extensive user programmable controls which can be configured to control space heating, hot water, Solar and Primary circuits.

Fully automatic electronic controls are integrated into the boiler, with a wide range of control and sensor options available. An outside temperature sensor is included as standard to support full temperature compensated heating circuits. The controls also provides volt free inputs to control the activation of heating and hot water circuits, a 0-10v input to control demand, and volt free outputs to indicate burner on and fault. All of which can be used when connected to an external BMS system.

Each burner module consists of a stainless steel combustion chamber, premix burner, modulating fan and gas valve, ignition and flame detection electrodes and common flow and return NTC sensors for accurate boiler management control. Fully premixed, radiating, modulating burner, integrated with gas valve to deliver precise gas/air mixture throughout the full modulation range.

A common combustion air intake manifold, takes air from the boiler room (type B23). An air non-return valve gas mixing system is integrated into the air/gas mixture supply of each burner, to ensure that flue products cannot contaminate the air supply, when the other burner is not in operation. A separate electronic management system, monitors the position of this air flap to ensure safe operation during all stages of boiler operation.

The safety and operation functions of each burner are managed by micro processor controlled circuit boards, one for each of the burners. The Master ontroller also acts as the cascade controller, switching/modulating the burners according to the demand and readings from the systems sensors. Control is performed using comparison parameters between the requested temperature and the global flow temperature.

1.1.2 Control Logic

At full demand, each burner is ignited one at a time, until both burners are operating at full output. As flow and return temperatures increase, both burners will begin to modulate down together, until both are operating at minimum input rate.

As flow temperatures begin to approach the calculated set point, one of the burners will stop, leaving the other operating at minimum input rate. This will continue until both burners have stopped and temperature flow requirements have been fully satisfied.

1.2 SYMBOLS USED IN THIS GUIDE

DANGER!

Indicates serious danger to personal safety and life

DANGER of electric shock!

Indicates serious danger from electricity to personal safety and life

CAUTION!

Indicates a potentially dangerous situation for the boiler and the environment

INFORMATION

Suggestions to assist the user in implementing instructions in this guide

ADDITIONAL READING

Reference to additional information in other documents

1.3 FOR WHOM IS THIS MANUAL INTENDED?

This manual is intended for the heating specialist who installs commercial/industrial heating plant and equipment.

2.0 SAFETY

2.1 USAGE AND COMPETENCY

2.1.1 Improper Use

This Potterton Commercial Heating product has been designed and manufactured to comply with current European standards of safety. However, following an improper use, dangers could arise concerning the safety and life of the user or of other people, or damage could be caused to the boiler or other objects. The boiler is designed to be used in a pumped hot water space heating system and indirect potable hot water supply and storage. Any other use of this boiler will be considered improper. Potterton Commercial declines any responsibility for any damage or injuries caused by an improper use. In order to use the boiler according to its designed scope, it is essential to carefully follow the instructions given in this guide.

2.1.2 User Competency

This boiler is not intended for use by persons (including children) with reduced physical, sensory or mental capabilities, or lack of experience and knowledge, unless they are given supervision or instruction concerning the use of it by a person responsible for their safety. Children should be supervised to ensure they do not play with the boiler.

2.1.3 Engineer Competency

The installation, adjustment & servicing of this boiler must be carried out by a competent person (In the UK by a Gas Safe Registered Engineer and in IE by a (RGII) Registered Gas Installer) and installed in accordance with current standards and regulations. Failure to correctly install or maintain this boiler could cause injury to persons or damage to property. The manufacturer shall not be held liable for any such injury and/or damage.

2.2 GENERAL SAFETY

2.2.1 Smell of Gas

If you smell gas - follow these safety instructions:

- **Do NOT** turn off or on any electrical switches (including light switches)
- **Do NOT** smoke
- **Do NOT** use the telephone
- **DO** evacuate persons away from the source of the gas smell
- **DO** close the main gas shutoff valve
- **DO** open all the windows and doors where the gas leakage has occurred
- **DO** inform the gas authority or a competent specialist as soon as possible

2.2.2 Flammable Substances

Do not store or use explosive or easily inflammable material (such as petrol, paint or paper) in the same room where this boiler has been installed.

2.2.3 Boiler Installation and Maintenance

This boiler has been designed for use with G20 and G25 gasses and is manufactured to give an efficient, safe and long service life. To ensure continued trouble-free operation of the boiler at maximum efficiency, it is essential that correct installation, commissioning, operation and service procedures are carried out strictly in accordance with the instructions given in this manual (*see section 7.0*)

Only original parts and accessories from the manufacturer may be used on this boiler. Using non-approved parts may compromise the safety of the boiler and invalidate any warranty.

In the event of failure and/or suspected faulty functioning of the boiler. Switch off the boiler and contact suitable qualified technicians. Do not attempt to make any repairs unless you are suitably qualified and competent to do so.

2.3 REGULATIONS AND STANDARDS

This boiler must be installed in accordance with relevant British Standard Specifications, Codes of Practice and current Building Regulations, together with any special regional requirements of the Local Authorities, Gas undertaking and Insurance I.E.E. Regulations for the Electrical Equipment of Buildings. The installation of the appliance must be in accordance with the relevant requirements of:

- Health and Safety at Work act 1974
- Building Regulations 2010
- Electricity at Work Regulations 1989
- Management of Health and Safety at Work Regulations 1998
- Manual Handling regulations 1992
- Model Water By-Laws 1986
- BS 7671:1992 Requirements for Electrical Installations, IEE Wiring, Regulations 16th Edition
- BS 5440:2000: Part 1 - Specification for the Installation of Flues
- BS 5440:2000: Part 2 - Specification for the Installation of Ventilation for Gas Appliances
- BS 6644:2005 - Installation of Gas Fired Hot Water Boilers for inputs between 60kW and 2 MW
- BS 7074:1989: Part 2 - Applications Selection and Installation of Expansion Vessels and Ancillary Equipment for Sealed Water Systems.
- BS 6880:1988 - Codes of Practice for Low Temperature Hot Water Systems
- CP 342:2 - Centralised Hot Water Supply Gas Safety (Installation and Use) Regulations 1998
- IM/11 - Flues for commercial and Industrial Gas Fired Boilers and Air Heaters
- IGE/UP/1 - Soundness Testing and Purging Procedure for Non Domestic Installations
- IGE/UP/2 - Gas Installation Pipe work, Boosters and Compressors for Industrial and Commercial Premises

These manufacturer's notes must not be taken in any way as over-riding statutory obligations.

2.4 CE MARKING

There are two data plates located on the appliance . One is mounted on the inside of the front LH side panel (which becomes visible when the front door panel is removed) and the other is on the REAR panel casing.

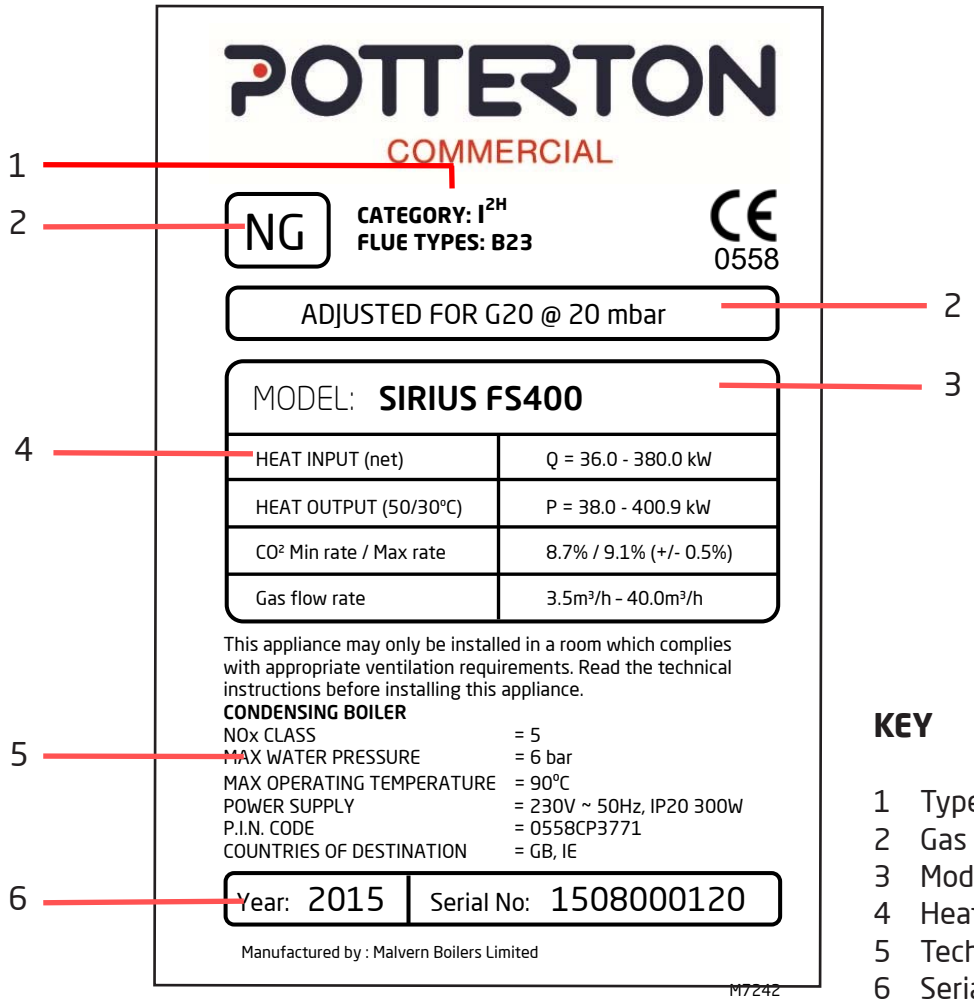

KEY

1 Type approval designation
2 Gas type and pressure
3 Model Name
4 Heat, gas flow & CO^2 data
5 Technical data
6 Serial number and year

The CE marking documents that the appliance complies with the essential requirements of the following directives:

- Gas appliance directive (2009/142/EC)
- Electromagnetic compatibility directive (89/336/EEC)
- Low voltage directive (2006/95/EEC)
- Efficiency requirements directive (Council Directive 92/42/EEC) for condensing boilers
- Protection requirements (04/108/EG) is only guaranteed when operating the boiler for its correct purpose.

This manual is an integral and indispensable part of the boiler and it is suggested that this manual is kept in a safe place for future reference.

3.0 TECHNICAL DATA

3.1 DIMENSIONS AND CONNECTIONS - FS400

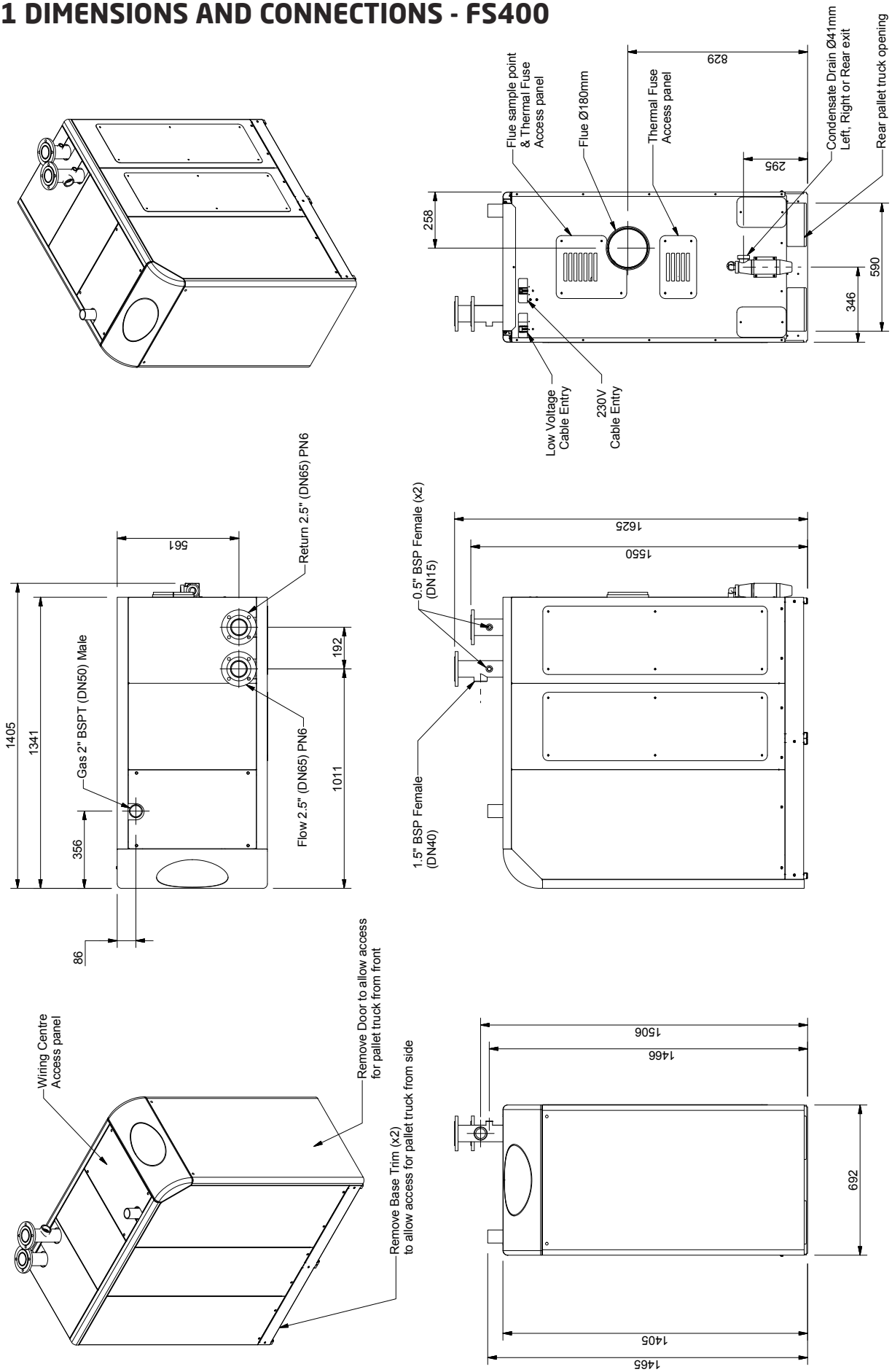

3.1 DIMENSIONS AND CONNECTIONS - FS525

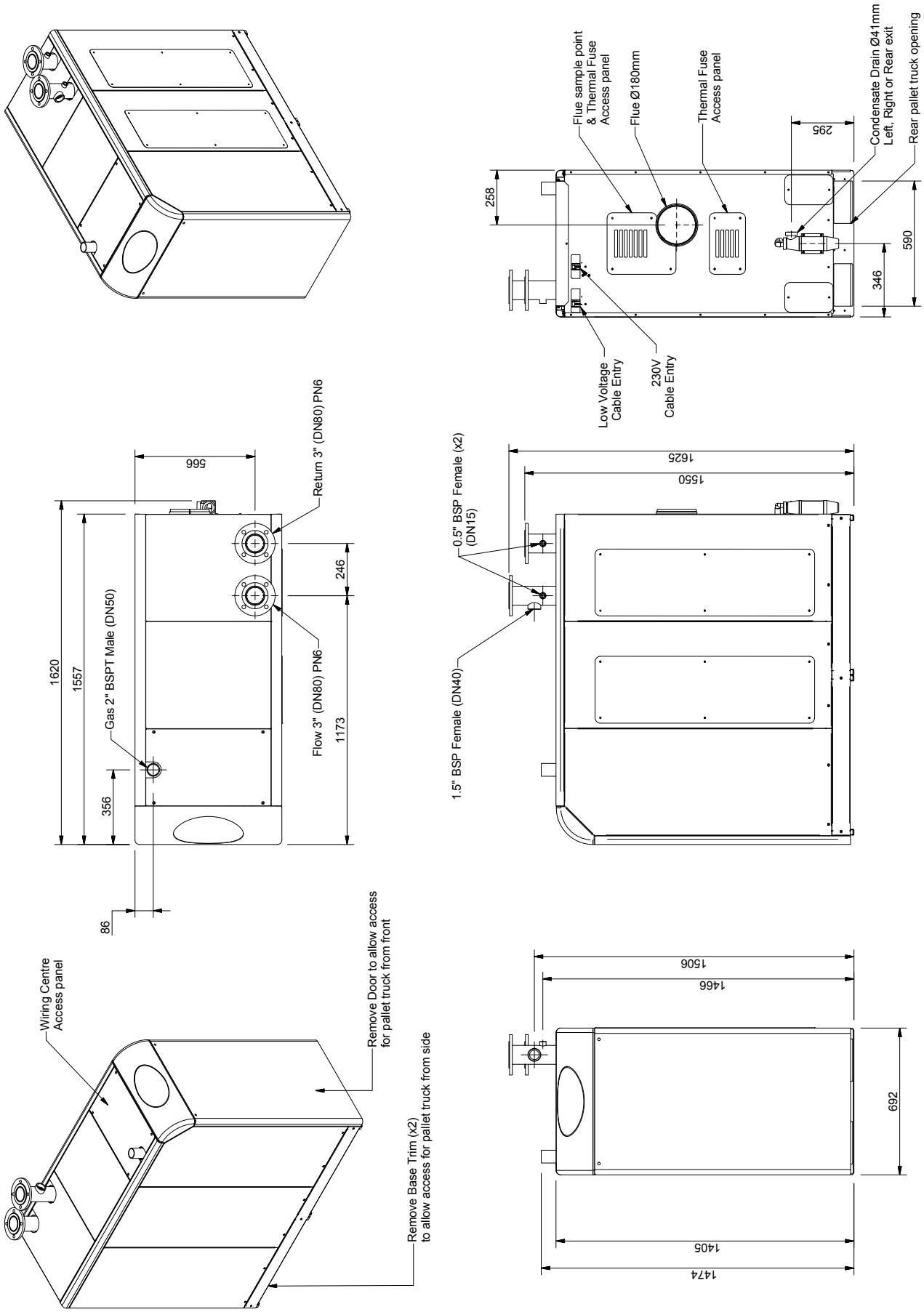

3.2 SPECIFICATION DATA

General performance	Unit	FS400	FS525
Nominal Heat Input net (gross)	kW	380 (421.7)	500 (554.9)
Minimum Heat Input net (gross)	kW	36.0 (39.9)	47.0 (52.2)
Nominal Heat Output at 50/30°C	kW	38.0 - 400.9	49.6 - 527.0
Nominal Heat Output at 80/60°C	kW	35.0 - 368.6	45.6- 485.5
Gas Consumption (G20)	m^3/h	3.5 - 40.0	4.5 - 52.4
Flue gas temperature at 80/60°C	°C	80.0	80.0
CO_2 at max output (min output)	%	9.0 (8.7)	9.0 (8.7)
CO at max output (min output)	ppm	150 (10)	150 (10)
NOx Value (@ 0% O^2)	mg/kWh	<40	<40
NOx Class	Class	6	6
Sound levels at maximum output (@1m)	dB(A)	59	65
Heating			
Efficiency max heat output 50/30°C	net %	105.5	105.4
Efficiency max heat output 80/60°C	net %	97.0	97.2
Efficiency 30% heat output	net %	108.1	108.6
Seasonal Efficiency (part L2 CV)	gross %	97.0	97.3
Operating pressure - min / normal / max	bar	1.0 / 4.0 / 6.0	1.0 / 4.0 / 6.0
Max permitted flow temperature	°C	90	90
Flow / Return connections	Flange size	DN65 PN6	DN80 PN6
Minimum flow rate	m^3/h	6.75	9.0
Electrical			
Electrical supply voltage / Hz	V/Hz	230 / 50	230 / 50
Minimum power consumption	A (W)	0.1 (24)	0.1 (24)
Maximum power consumption	A (W)	1.1 (253)	1.4 (322)
Fuse rating on mains supply	A (W)	5	5
Flue			
Flue connection single flue	mm	180	180
Flue volume	m^3/h	673	875
Max flue resistance permitted	Pa	200	250
Other			
Gas connection	BSP	Male 2"	Male 2"
Condensate connection	mm	40	40
Dimensions & Weights			
Weight, (unpacked)	kg	359	424
Weight (packed)	kg	423	488
Height	mm	1605	1605
Width	mm	692	692
Depth	mm	1405	1620
Service clearance, rear	mm	600	600
Service clearance, right & top	mm	600	600
Service clearance, left	mm	400	400
Service clearance, front	mm	800	800

3.3 SENSOR VALUES

3.3.1 10K Sensors (all flow/return sensors):

Temperature (°C)	Resistance (Ohms)	Temperature (°C)	Resistance (Ohms)
-30	175203	50	3605
-25	129269	55	2989
-20	96360	60	2490
-15	72502	65	2084
-10	55047	70	1753
-5	42158	75	1481
0	32555	80	1256
5	25339	85	1070
10	19873	90	915
15	15699	95	786
20	12488	100	677
25	10000	105	586
30	8059	110	508
35	6535	115	443
40	5330	120	387

3.3.2 1K Sensor (outside temperature sensor):

Temperature (°C)	Resistance (Ohms)	Temperature (°C)	Resistance (Ohms)
-20	7578	12	1690
-15	5861	13	1621
-10	4574	14	1555
-5	3600	15	1492
-4	3435	16	1433
-3	3279	17	1375
-2	3131	18	1320
-1	2990	19	1268
0	2857	20	1218
1	2730	21	1170
2	2610	22	1125
3	2496	23	1081
4	2387	24	1040
5	2284	25	1000
6	2186	26	962
7	2093	27	926
8	2004	28	892
9	1920	29	859
10	1840	30	827
11	1763	35	687

3.4 WIRING DIAGRAM - PCB 1

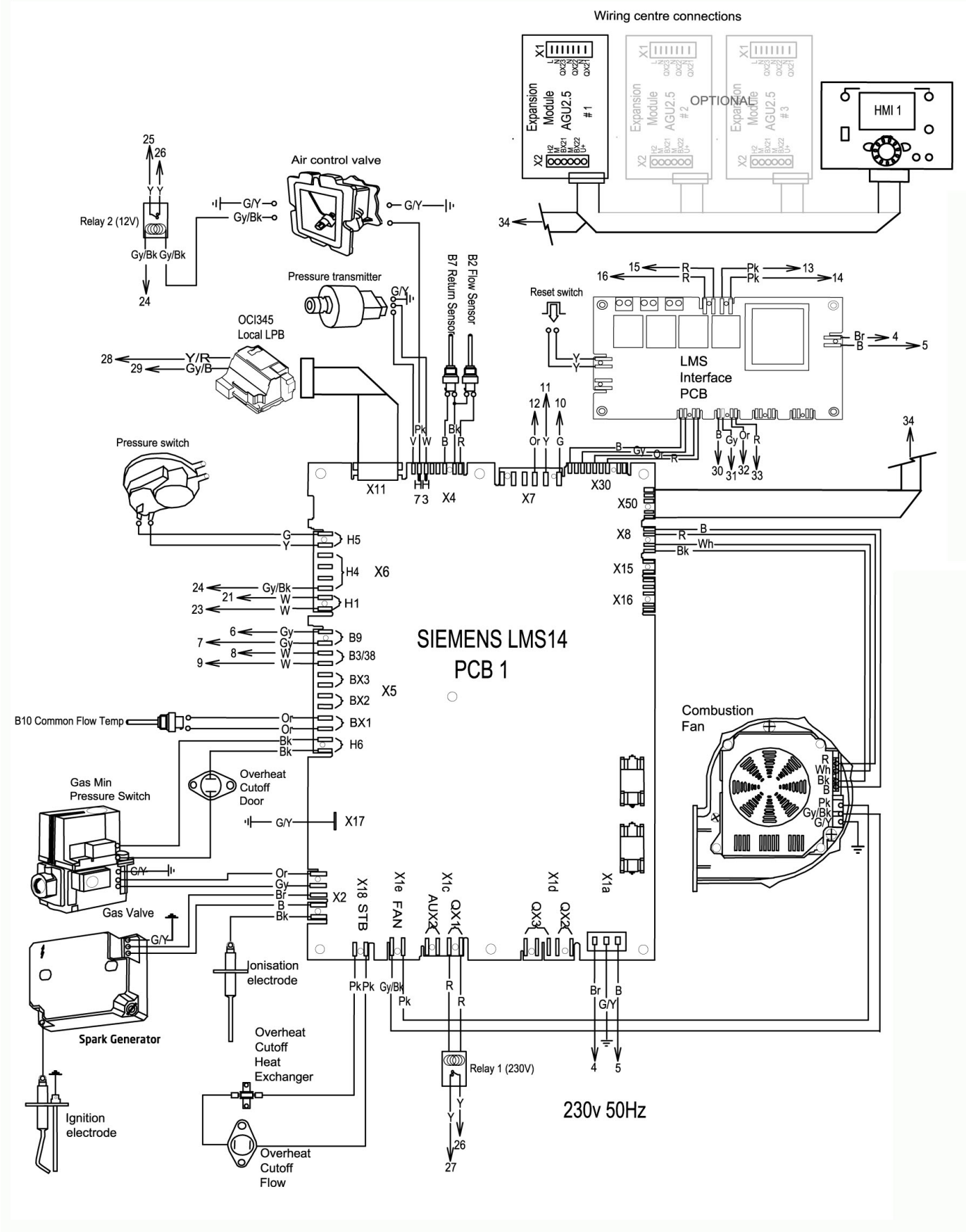

3.4 WIRING DIAGRAM - PCB 2

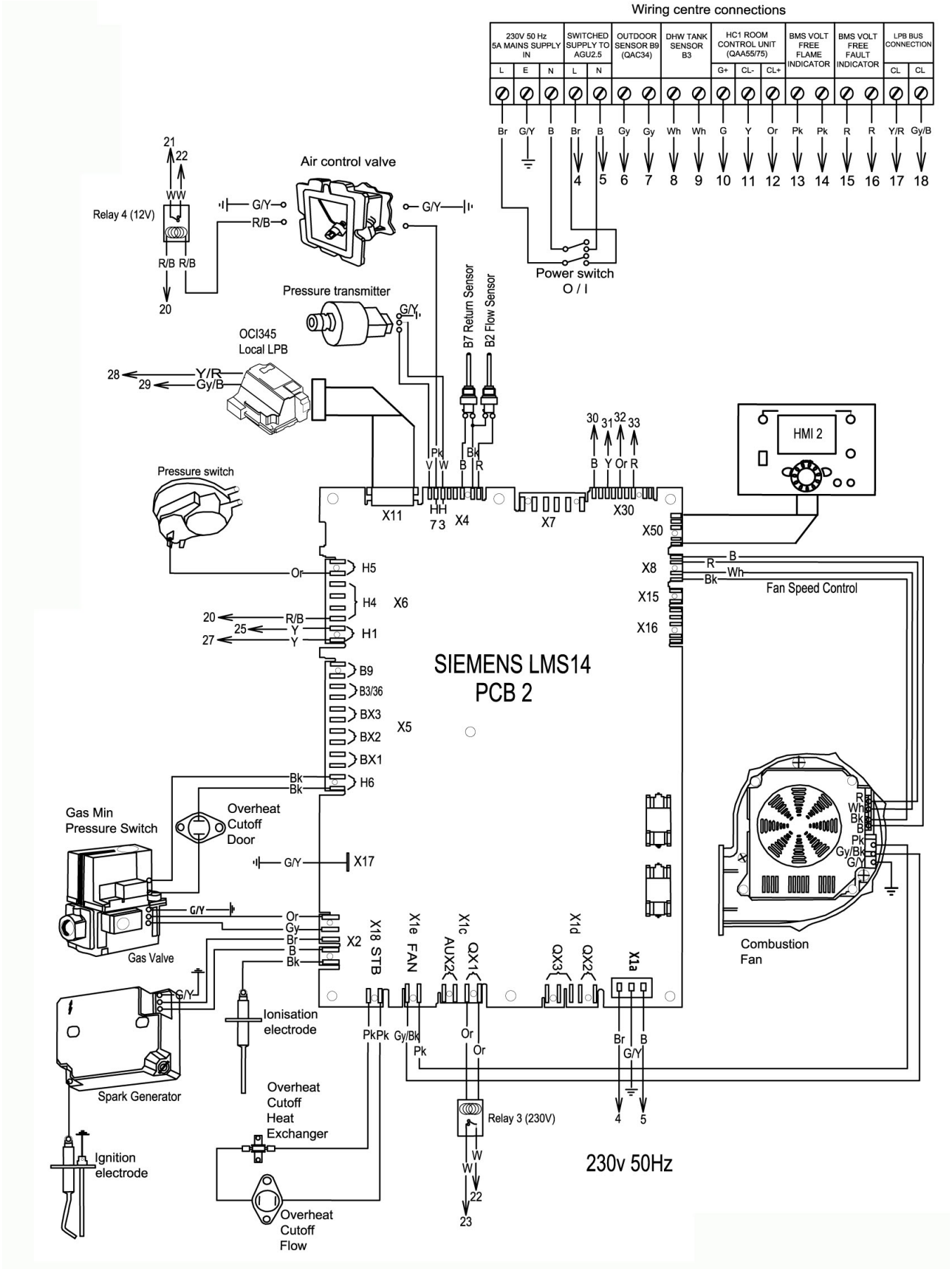

4.0 PRIOR TO INSTALLATION

4.1 UNPACKING THE BOILER

This boiler is delivered assembled and protected by a plastic bag, inside a strong wooden crate. The packaging is designed to be handled by a forklift or narrow base pallet truck. The complete crated boiler will fit through a standard door of 1,970mm high by 750mm wide.

Remove screws fixing crate sides to the base. Remove screws from one end of the crate. Remove end of crate and slide the main body of the boiler off the opposite end. Remove plastic wrapping once the boiler has reached its intended installation area.

Boiler is heavy (up to 450kg). Use only specialist lifting equipment to move the boiler.

Dispose of plastic packaging carefully. Keep out of the reach of children and animals. Recycle packing materials whenever possible.

4.2 LOCATING THE BOILER

The location selected for installation of the boiler must allow the provision of a satisfactory flue, an adequate air supply , a drain and be well illuminated. A purpose built plant room or compartment is strongly recommended.

If a purpose built plant room is not available, measures should be taken to protect the boiler from damage and prevent any extraneous matter from being stored on or around the boiler. See BS 6644 Clauses 4, 5 and 6 for details. Any combustible material adjacent to the boiler must be so placed and shielded as to ensure that it's temperature does not exceed 66°C .

There must be easy access to the plant room and boiler at all times. The boiler must be located in an area where leakage from the water connections or the combined temperature and pressure safety valve will not result in damage to the area adjacent to it.
When such locations cannot be avoided, a suitable drain tray must be installed under the boiler. The drain tray must be no deeper than 38mm and must be 100mm wider and longer than the boiler. It should be piped to an adequate drain using 20mm (0.75in) diameter pipe, angled for proper drainage.

Access must be provided to the front of the boiler with adequate clearance for servicing and operation. *(see section 4.2.1 for details)*

The floor on which the boiler is installed must be flat and level. Levelling feet are provided on the boiler. The floor must be of sufficient strength to withstand the weight of the boiler when filled with water, and should satisfy the requirements of the Local Authority & Building Regulations.

4.2.1 Space Requirements

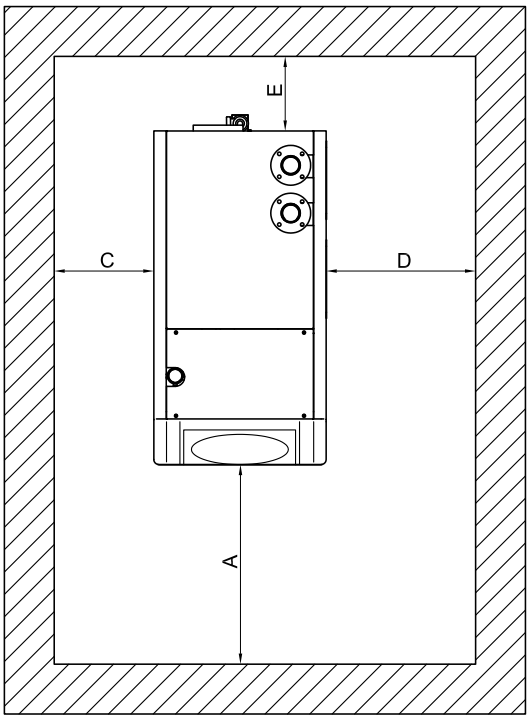

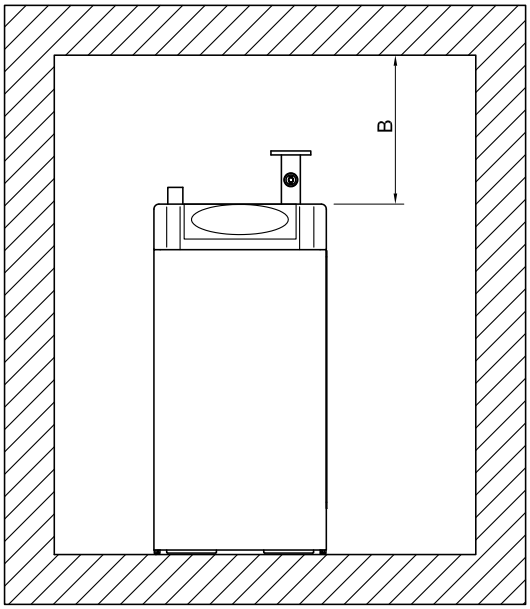

Dimension \ Model	400	525
A	800mm	800mm
B	600mm	600mm
C	400mm	400mm
D	600mm	600mm
E	600mm	600mm

4.3 POWER CONNECTION REQUIREMENTS

All electrical work in connection with the installation must be carried out by a trained electrician in accordance with current regulations in force. The point of connection to the mains electricity supply should be readily accessible and adjacent to the boiler, and should be connected to the mains supply as detailed below.

The boiler is designed to operate from a 230V 50Hz, single phase supply, fused at 5 amps. Mains input cable should be at least 1.0 mm^2, and comply with BS6500.

The method of connection to the mains electricity supply should facilitate complete electrical isolation of the boiler. A suitable isolator should switch off all poles and have a contact opening width of at least 3mm, serving only the boiler.

A permanent live supply must be connected to the boiler. Automatic timed, remote operation or 0-10V control of the boiler can be achieved by connecting optional expansion modules inside the wiring centre. *(see section 5.3.2 for guidance on expansion module setup)*

4.4 REQUIREMENTS FOR HEATING CIRCUIT WATER

4.4.1 Connection into Existing Heating Systems.

Before replacement of an existing boiler, it is necessary to thoroughly clean out the old system first. This is best achieved by using a suitable cleaning solution.

If cleansing of the existing system is not possible (e.g. very old or large systems), it is recommended that this system water is separated from the boiler system by means of a secondary heat exchanger.

Please ensure you have considered the following before installation of the new boiler:

- If you intend to use the existing flue, check that flue outlet is suitable for condensing boilers, is the correct size, is correct for the temperature of the products of combustion and is manufactured according to current regulations. It must be tested for soundness and must not have any restrictions or defects. Also ensure that the flue outlet system has sufficient connections for the discharge of condensate.
- The boiler room has a suitable outlet for the discharge of condensate produced.
- The electrical connections comply with the current electrical standards and the work has been carried out by a suitably qualified person.
- The gas supply pipe work is constructed to the current regulations in force.
- The expansion vessels and associated fittings are correctly sized to absorb the total expansion of the system and in tested working order.
- The circulation pump output, the head and flow direction are suitable.
- The complete system has been cleaned of impurities and lime scale.

4.4.2 Connection into new Heating Systems.

It is recommended to thoroughly clean out the new system with a system flush product, before commissioning the boiler.

Whether connecting to an existing or a new heating system, a filter/strainer with a size of 100 microns (with two isolation valves) must be fitted in the return pipe. During routine maintenance and service visits it can be removed and cleaned, which will help protect the boiler from contaminants, inside the heating system.

4.4.3 Water Quality and System Inhibitors

It is essential, for the long life of the boiler that the following water quality limits are not exceeded:-

Water Hardness	**<250ppm**
Chloride levels	**<200mg/l**
pH levels	**7.5 to 9.5**

If the system contains aluminium parts, the pH level must be less than 8.5. The pH value inside the system should only be measured after a steady state has been achieved (i.e. all filling and bleeding operations have been completed)

Chloride values of the system water and the supply water should be compared at regular intervals. If the Chloride value of the system water is considerably higher than the supply value, this would indicate that there is system leakage and water is being lost to evaporation. This will result in Chloride concentration and premature boiler failure if left untreated. If Chloride concentration levels have exceeded 200mg/l, the system should be flushed clean and refilled with low Chloride water and appropriate system treatments.

After cleaning and flushing of the system, it should be filled with an appropriate inhibitor or antifreeze treatment to maintain water quality levels. The following system treatments have been tested and are recommended for use in this boiler:

	FERNOX	SENTINEL
Inhibitors	Protector/Alphi 11	X100, X500
Noise reducer		X200
Universal cleaner	Restorer	X300
Sludge remover	Protector, Restorer	X400
Antifreeze	Alphi 11	X500

If a mixture of additives is required in the same system (e.g. sludge remover and inhibitor) it is recommended that the same manufacturer of additive be used.

4.5 HYDRAULIC PUMP REQUIREMENTS

The size of the pumps must be determined by the installer or technical engineer according to boiler data and system design (see notes below). If using the boiler with a secondary heat exchanger, it is important to size the pumps on the secondary side correctly, so that the correct △T can be achieved on the primary side.

The installer must ensure that when the boiler demand is turned on, the boiler circulation pump and where applicable, the secondary system circulation pump must be active at the same time. When the boiler demand is switched off the circulation pump and where applicable, the secondary system circulation pump must continue to run on for a minimum of three minutes after boiler operation has stopped. Failure to ensure minimum water circulation when the burners of the boiler are in operation may result in premature heat exchanger failure.

A system which proves the operation (by means of water flow or motor current) of the boiler circulation pumps, before the burners of the boiler can operate is recommended to ensure long service life

The use of a mixing header fitted between the boiler circuit and system circuit is recommended. This becomes essential if the system requires flow rates superior to the maximum permitted boiler flow rates, (i.e. less than △T 20°C)

4.5.1 Minimum Flow Requirements

The boiler pump must have a delivery head which can ensure the following minimum water flow rates at all times (equivalent to a △T of 35°C at maximum output) :

Model	Minimum Water flow rate (m^3/h)
FS400	6.75
FS525	9.00

With the boiler firing at maximum rate the △T should not be less than 20°C (unless using a mixing header system)

4.5.2 Water Pressure Loss

The boiler pump must have a delivery head which can ensure the water flow rate in the following diagrams:

Water pressure loss graphs

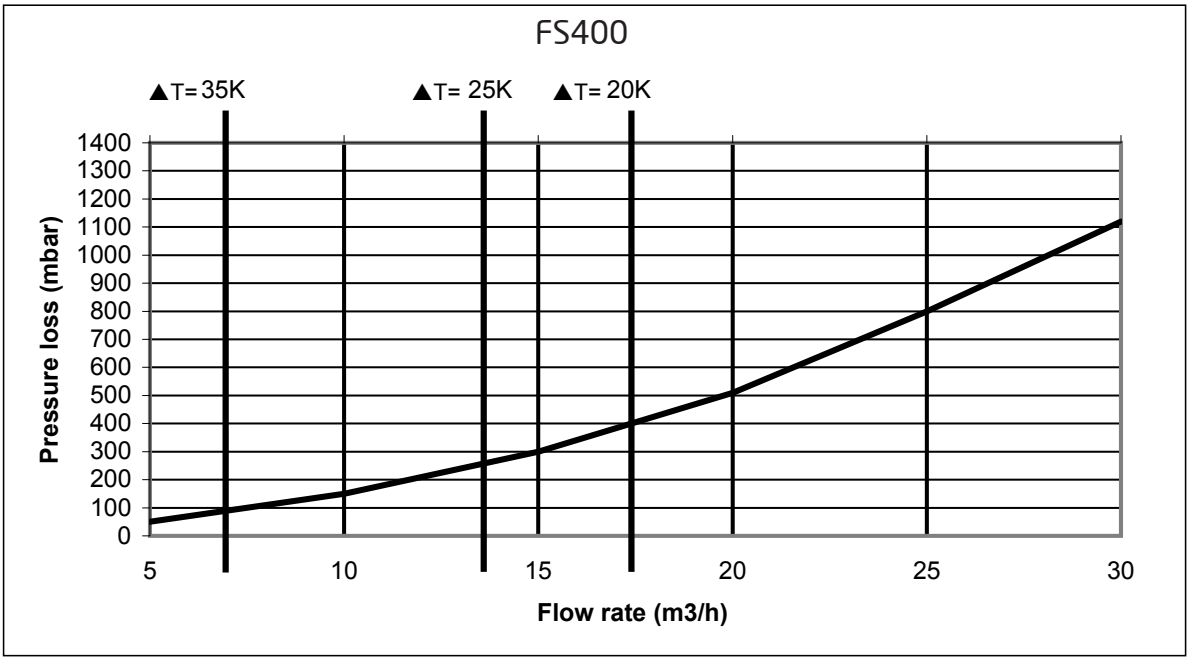

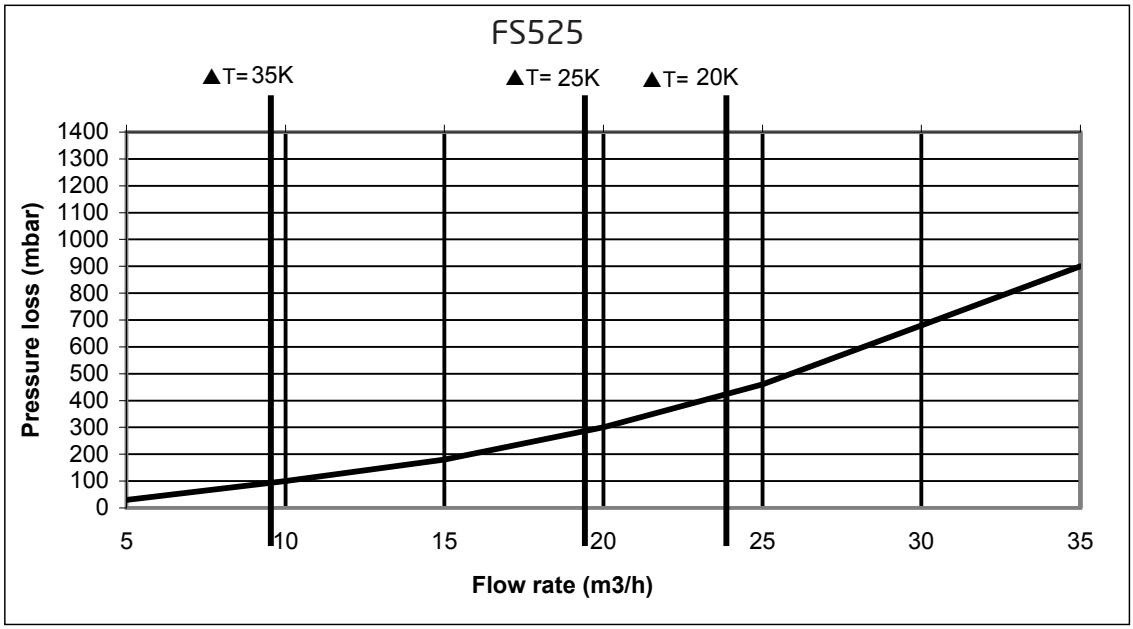

4.6 APPLICATION EXAMPLES

4.6.1 LOW LOSS HEADER SYSTEMS

4.6.1.1 MIXER HEATING CIRCUIT HC1

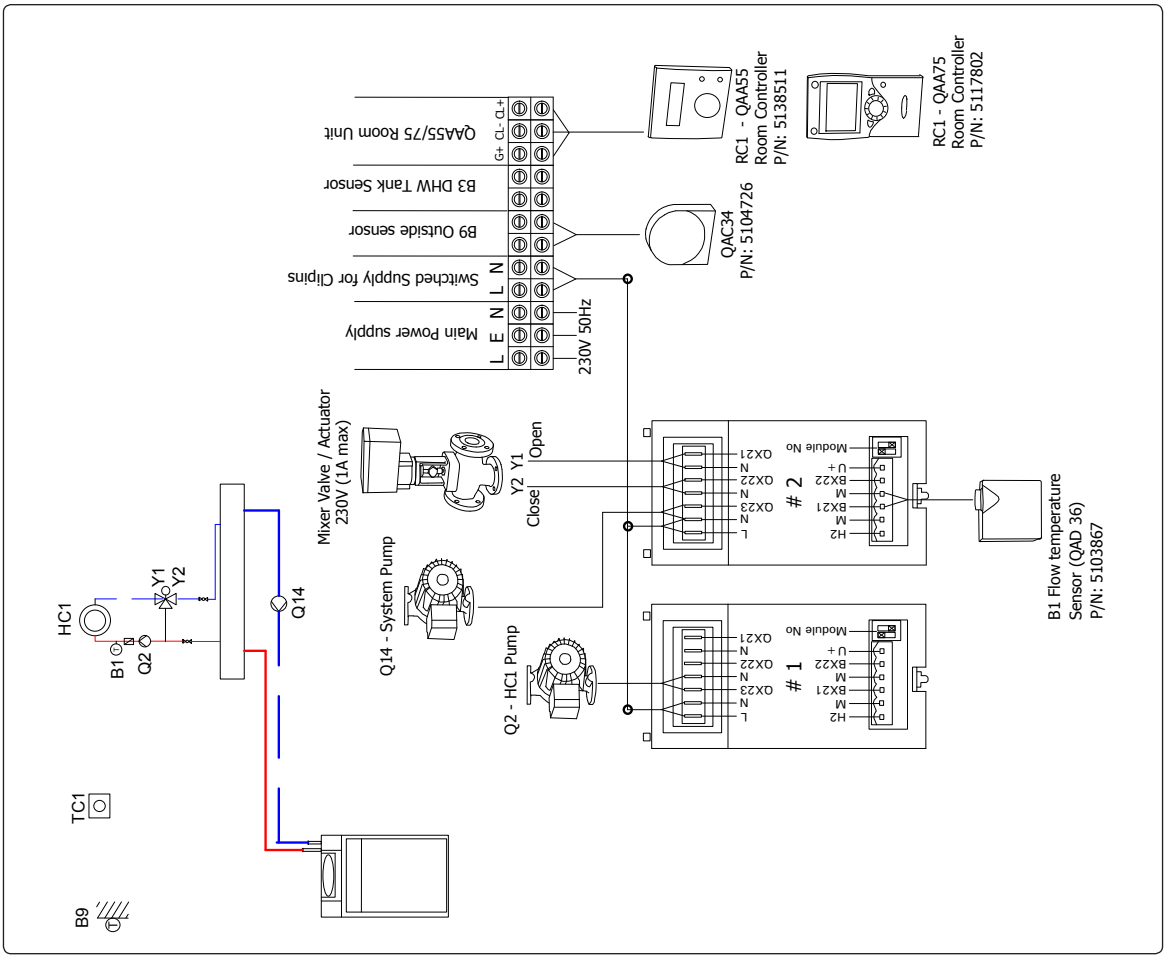

4.6.1.2 BASIC HEATING CIRCUITS HC1, 2 & 3

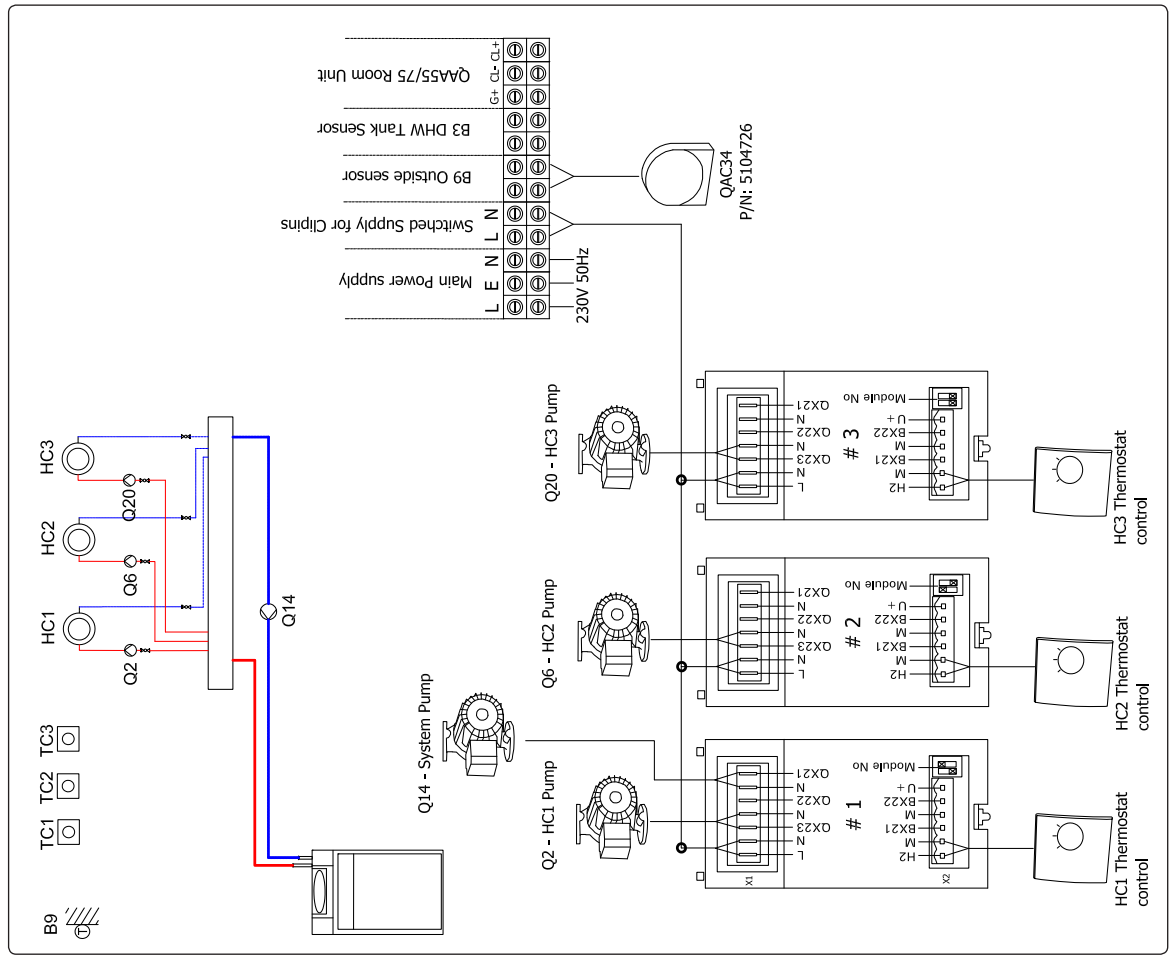

4.6.1.4 BASIC HEATING CIRCUITS HC1,HC2, DHW & SOLAR

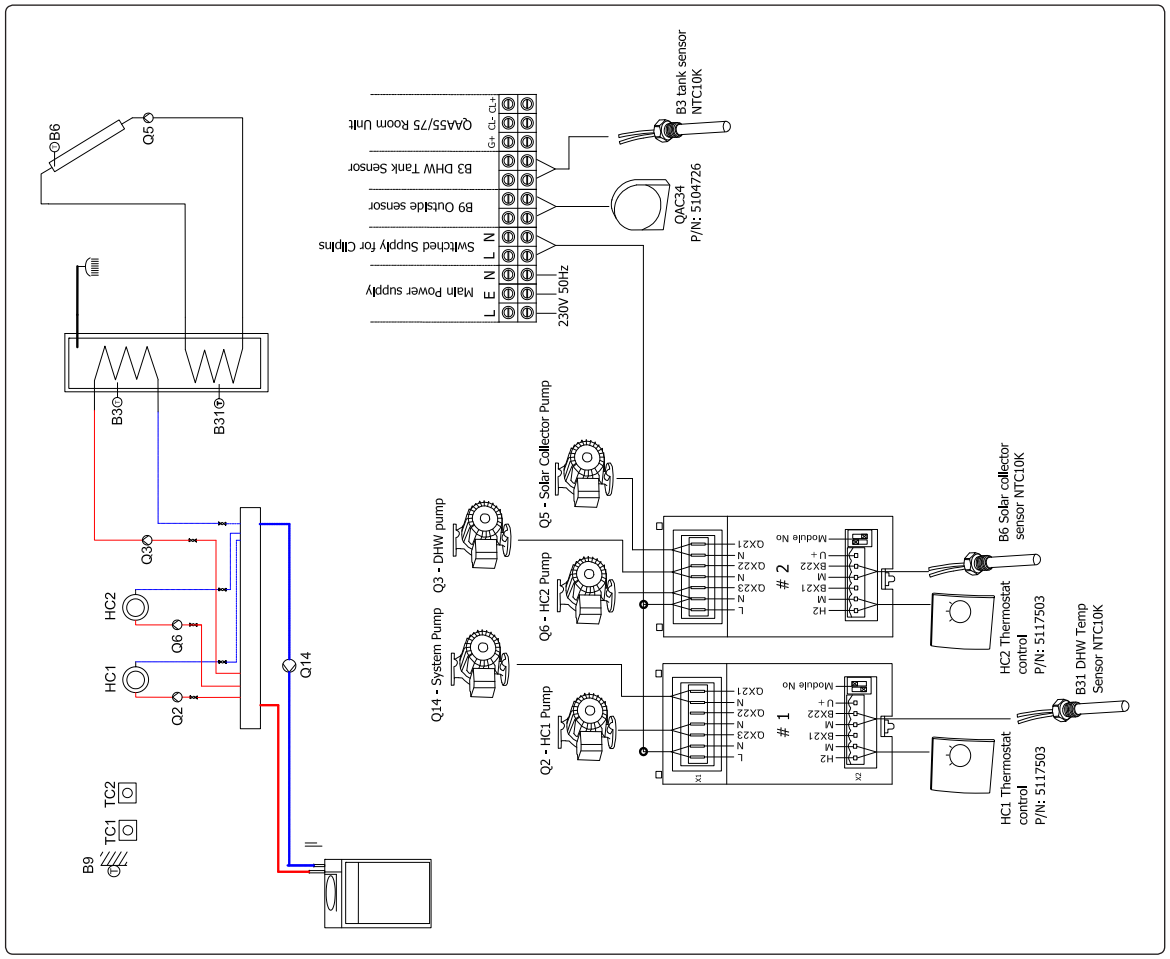

4.6.1.3 BASIC HEATING CIRCUIT HC1, HC2 & DHW

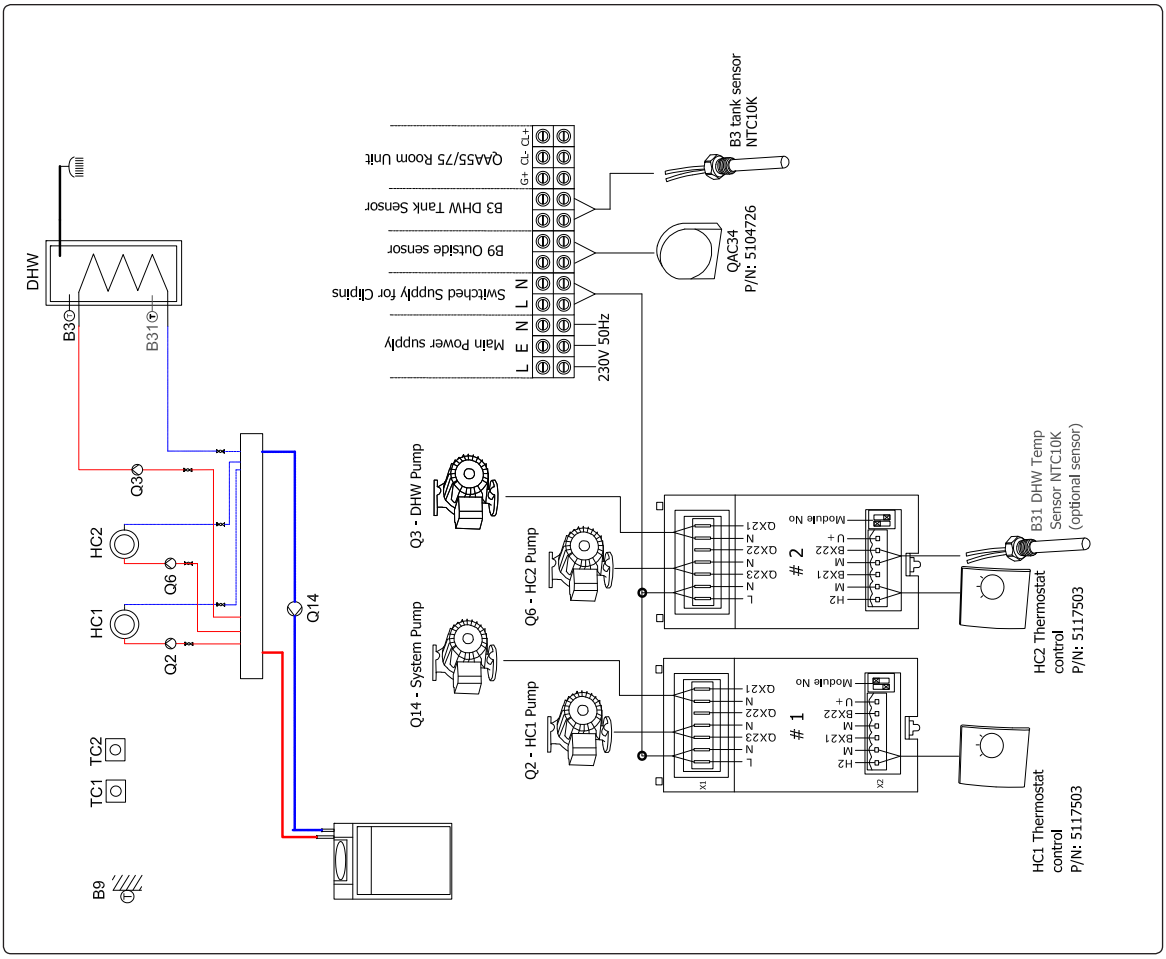

4.6.2 TWO PIPE SYSTEMS

4.6.2.1 CONTROLLED HEATING CIRCUIT HC1 & BASIC HC2

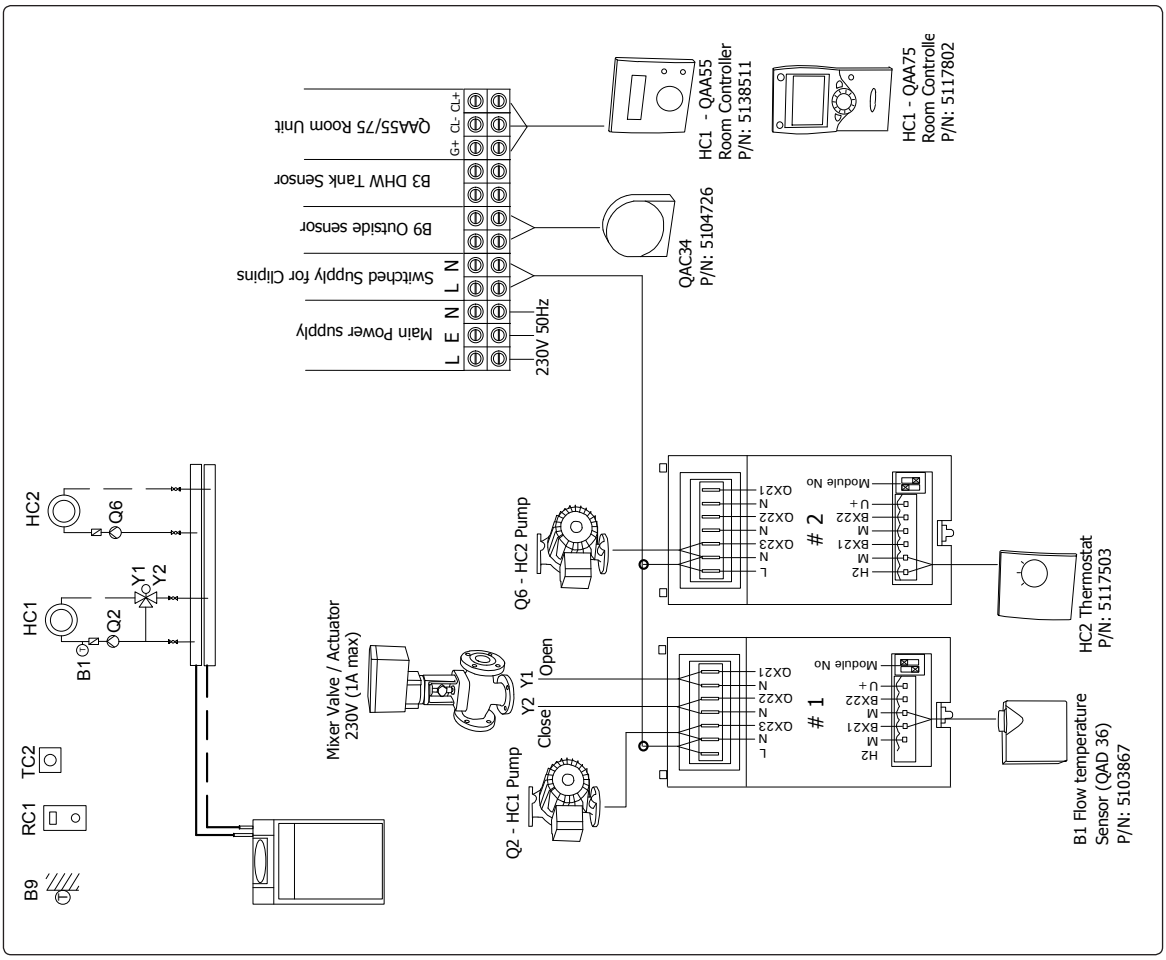

4.6.2.2 MIXER HEATING CIRCUIT HC1 & BASIC HC2

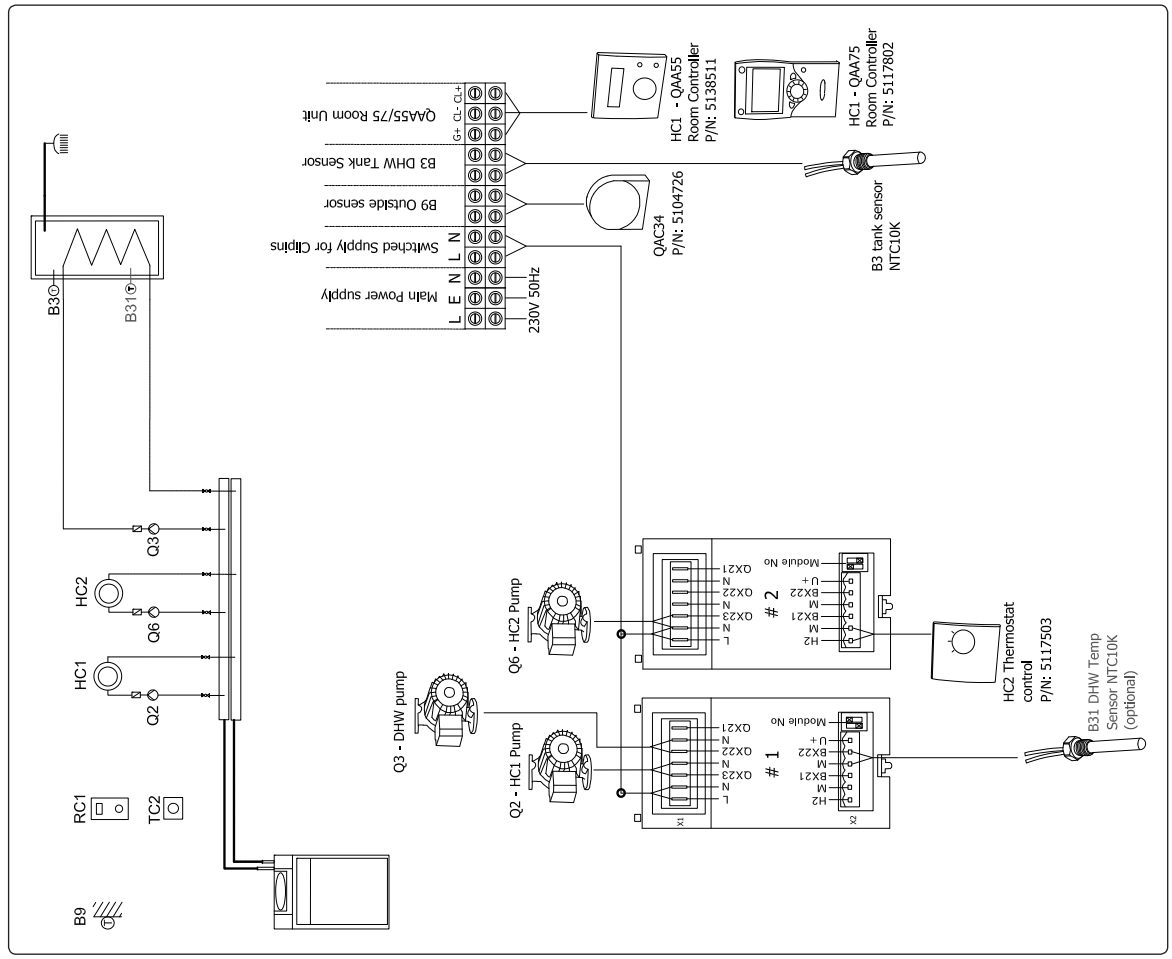

5.0 INSTALLATION

5.1 WATER CONNECTIONS TO LOW TEMPERATURE CIRCUITS.

5.1.1 Flow and Return Connections

The flow and return feeds are identified on top of the boiler. Connect the system flow and return pipes to these outlets using appropriate flanged fittings *(see section 3.2 for details)* using an appropriate gasket between each flanged connection.

5.1.2 Safety Relief Valve and Expansion Vessel

In the case of open vented heating systems, connect the safety header pipe and return pipe. In the case of sealed heating systems, install an expansion vessel and a temperature and pressure safety valve.

Any expansion vessel must be designed to withstand temperatures of the heating system (vessels will typically be coloured red or white) and sized to allow expansion of the entire system water to which the boiler is connected. As an example, water being heated from 0°C-100°C will increase in volume by approximately 4.5%.

It is advised that the 1 ½" BSP threaded outlets provided on the boiler flow pipe are used for the fitting of the safety valve.

5.2 CONDENSE CONNECTIONS

Condensation is formed in the normal operation of the boiler and this must be continuously discharged into a drain. Given the acidity level of condense discharge (pH 3.5 - 4.5) only plastic material can be used for the discharge pipe work. This pipe should be no less than 40mm diameter with a drop of at least 30mm for every metre of pipe work should be used. A syphon trap is supplied which should be connected into a drain via a tundish or air break.

External pipe work and that passing through a wall to the outside should be run in a minimum of 40mm diameter. External pipe work should be insulated to protect against frost and freezing temperatures.

The condensate trap must be filled with water before operating the boiler

It is important that the condensate flow must be maintained, even in freezing conditions. In the event that the condensate becomes blocked, the boiler will shutdown and not operate normally again until the flow has been restored.

5.3 ELECTRICAL CONNECTIONS

THIS BOILER MUST BE EARTHED
Isolate the mains electrical supply before starting any work and observe relevant safety precautions

5.3.1 Access to electrical wiring panel

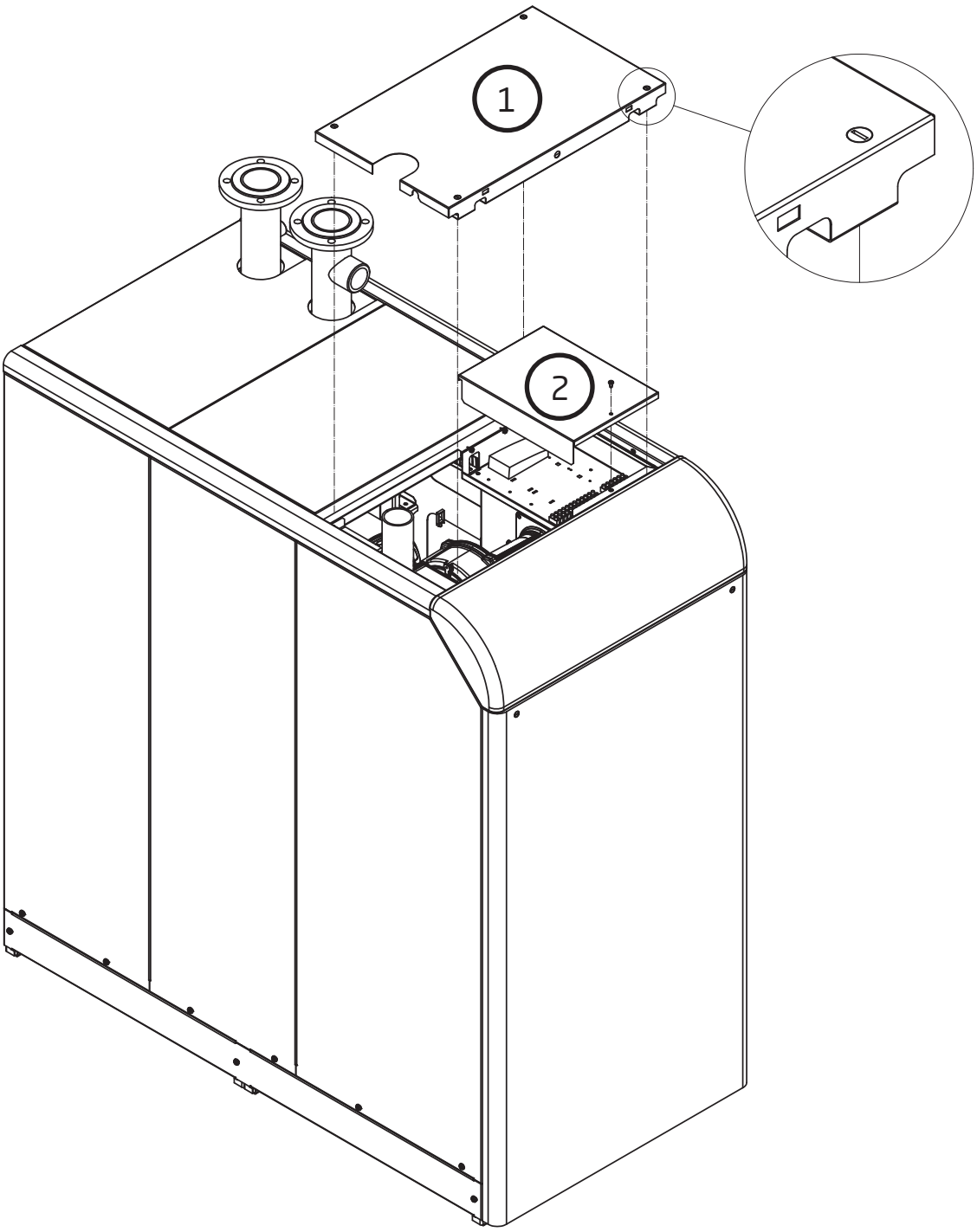

1 Undo 1/4 turn fasteners and lift panel vertically upwards

2 Undo single screw and lift panel vertically upwards

5.3.2 Boiler Electrical Connections

All electrical work in connection with the installation must be carried out by a trained electrician in accordance with current regulations in force.

Each Sirius boiler is supplied with a single AGU2.5 expansion module for boiler and heating circuit control. Each expansion module has a total of three 230V definable outputs, two sensor inputs and one multi-definable input/output. A total of three expansion modules can be connected onto the boiler using the fittings and wiring already supplied.

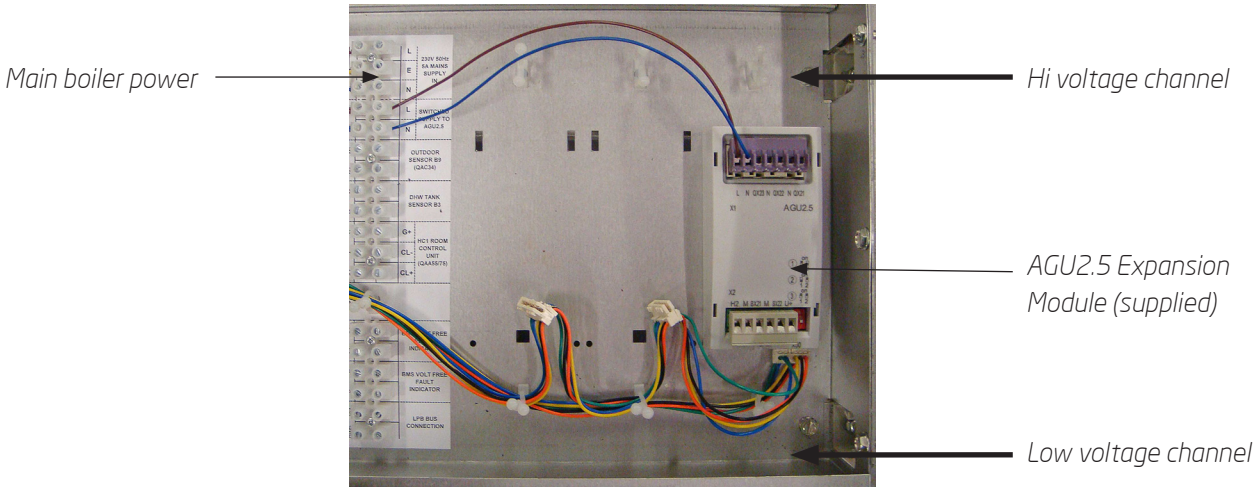

5.3.3 BMS Control - Use of H2 (Expansion modules 1 -3)

Remote enable

The ***operating mode*** of the heating circuits or DHW (when defined in the configuration lines 6046, 6054 or 6062) can be turned on or off remotely using switched contacts between the H2 terminals. Opening the contacts will switch the defined circuit(s) off. Closing the circuit will bring it back into operation.

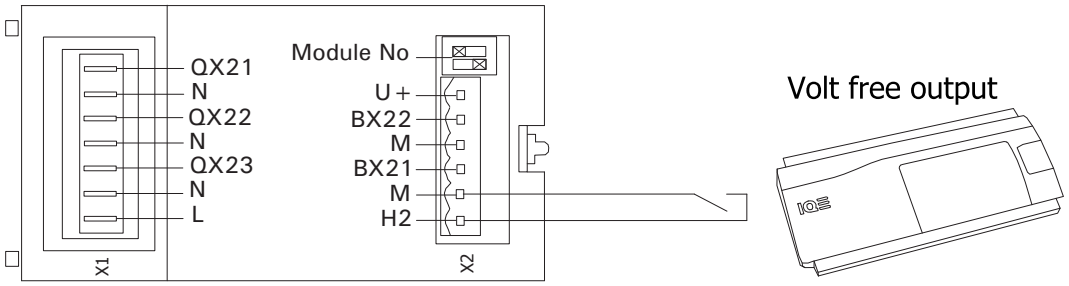

NB. When the heating or DHW circuits are switched off using this remote method, the operation buttons of the master control display will become locked and will only become active again once the remote enable circuit is turned on again remotely.

0 - 10V direct heating circuit temperature control (H2 Expansion Modules 1-3)

The operation and flow temperature output of the boiler can be controlled directly using a 0 - 10VDC signal. Once activated, the boilers will remain in operation as long as the voltage on H2 remains above 0.15 VDC.

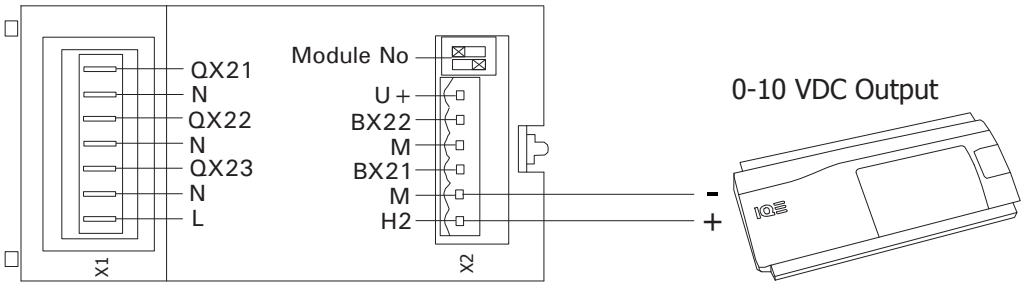

Example of 0-10V setup using expansion module 1

Siemens Parameter	Parameter description	Parameter setting	Notes
6020	Function extension module 1	Multifunctional	H2 can be freely configured
6046	Function of input H2 module 1	Consumer request VK2 10V	0-10V signal to control flow temperature setpoint
6047	Contact type H2	NO or NC	Not relevant to this function
6049	Voltage valve 1 H2	0.5Vdc	Voltage at which function value 1 applies
6050	Function value 1 H2	355	At voltage value 1 the flow temperature setpoint is 35.5°C
6051	Voltage valve 2 H2	10.0Vdc	Voltage at which function value 2 applies
6052	Function value 2 H2	820	At voltage value 2 the flow temperature setpoint is 82.0°C

NB. This control method cannot be used in conjunction with remote enable to control the heat output of a heating circuit, as remote enable will turn off this function. 0-10v only becomes active when the heating circuit(s) are in standby mode.

External / BMS controlled circulation pump essentials

When using a BMS or external control to operate the boiler, it is essential that the pump circulating water around the boiler is interlocked with the demand for heat from these controls, so that it should not be possible for the boiler to have a heating demand without the circulation pump being in operation.

It is also essential that there is adequate provision of an over-run of the circulation pump after the boiler has satisfied the heating demand, in order to prevent damage to the heat exchanger. A minimum over-run time of 3 minutes is advised.

NB. *Even in standby mode, the built in frost protection program will activate when the temperature detected inside the boiler drops below 5^{0}C. This results in the boiler switching on its burners, until the water temperature inside the boiler reaches 16^{0}C, at which point the burners switch off and the boiler returns to standby mode again. The circulation pump MUST operate during this process.*

Failure to provide adequate water circulation to the boiler, via operation of a pump, when the gas burners are in operation may result in heat exchanger damage and will invalidate the manufacturers warranty.

5.3.4 BMS Control - Use of wiring panel connections

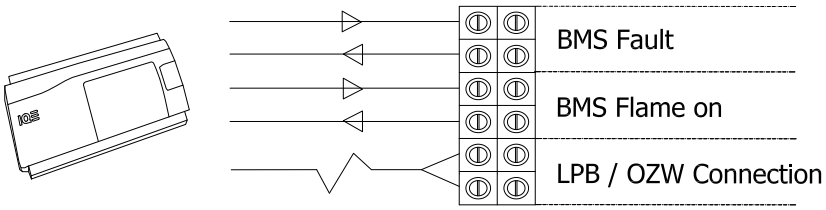

BMS Indicators (LMS14 Interface PCB)

The boiler has volt free outputs (or can be used with voltages up to 230v), which can be connected to a Building Management System or a remote indicator panel.

Fault - When no fault is present the circuit is open. After a fault occurs on any of the burners within the boiler, a relay on the interface PCB will activate and close the circuit, after the delay period set on the LMS14 Interface PCB (factory default is 5 minutes)

Fault delay adjustment - Remove the front door panel and right hand electrical cover (see section 7.2 for details). Using a small flatblade screwdriver set the pointer of the pot to the required delay in minutes (0 - 10 minutes range).

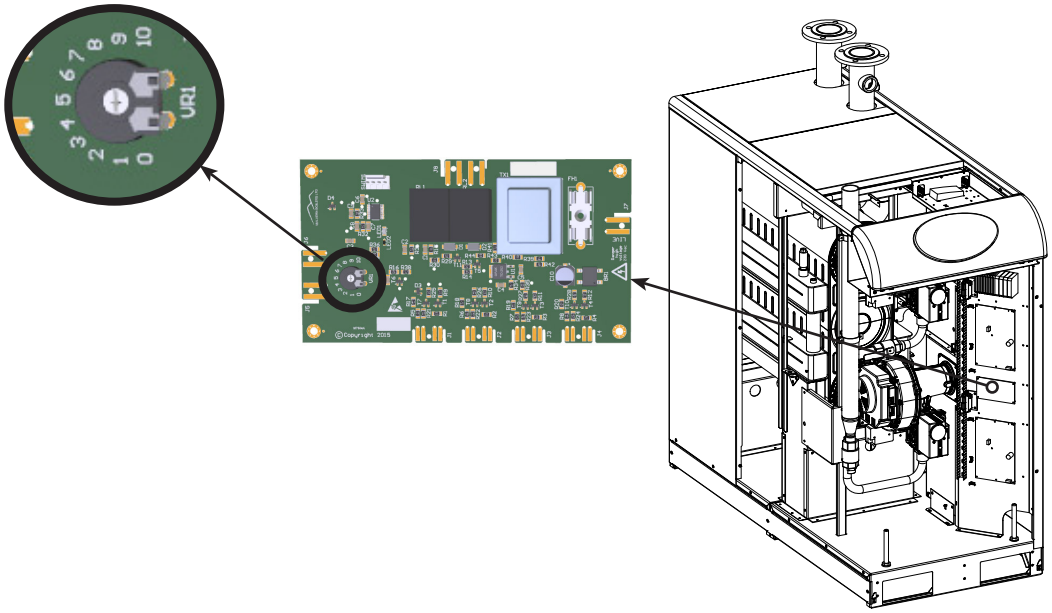

Flame on - When no heat engines are in operation the circuit is open. When the boiler burners are in operation a relay on the interface PCB will activate and close the circuit.

LPB / OZW Communication

Two wires provide communications with an external Siemens cascade controller. This can be used to control cascades of multiple boilers or be used with an interface device to facilitate communications on a Web based system or BMS. Using a Siemens OZW672 Web-Server it is possible to establish remote communications with Siemens own software or free phone app. Connections to BMS protocols such as BACnet or Lon are also possible. *Please contact Potterton Commercial for further details.*

WEB SERVER OZW672.01 AND OZW672.04 (P/N 5142798 & 5142799)

This web server can be connected directly to the SIRIUS FS and allows for remote plant control and monitoring via the web and Smartphone-App. A summary of the features available are as follows:-

- Operate the appliance via web browser, using a PC or Smartphone-App through the "cloud" from anywhere in the world (subject to web access availability).
- Change parameters and view fault messages through PC and Smartphone.
- Plant visualisation in the web browser or customised plant web pages.
- Send fault messages to maximum of 4 e-mail recipients.
- Create custom system monitoring logs over hours, days or weeks and send them automatically to 2 e-mail recipients, every day, week or month.
- 2 digital inputs for reporting plant room failures or limitations, which are outside of the COMBIflo direct
- control (e.g. water booster failure).
- Periodically (daily, weekly or monthly) send system reports to a maximum of 4 e-mail recipients.

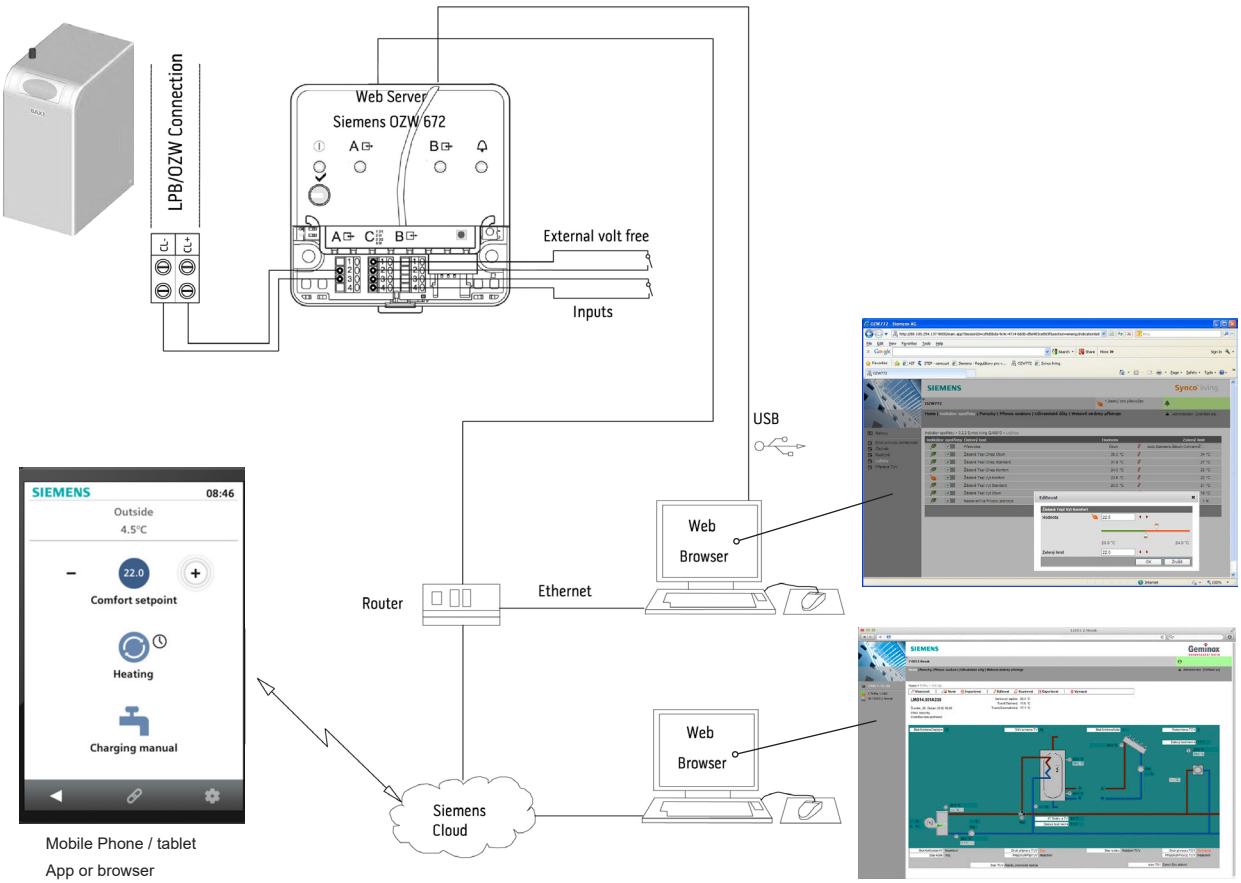

5.4 INSTALLING ROOM AND OUTSIDE TEMPERATURE SENSORS

5.4.1. Locating Room Thermostat Units (all types)

Siemens QAA55/58

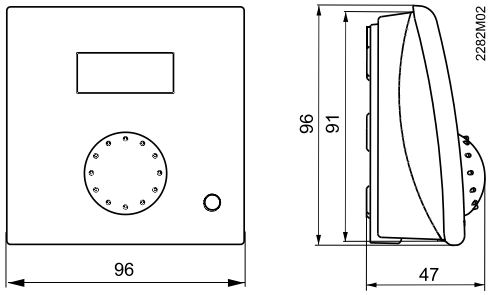

Siemens QAA75/78

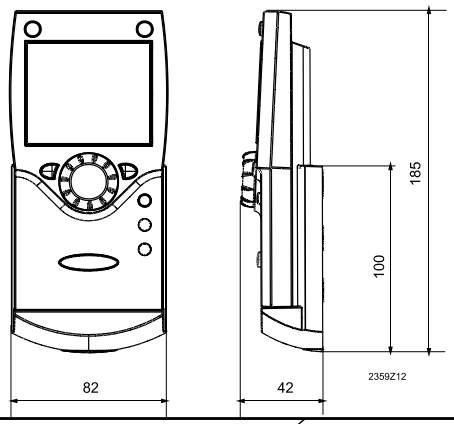

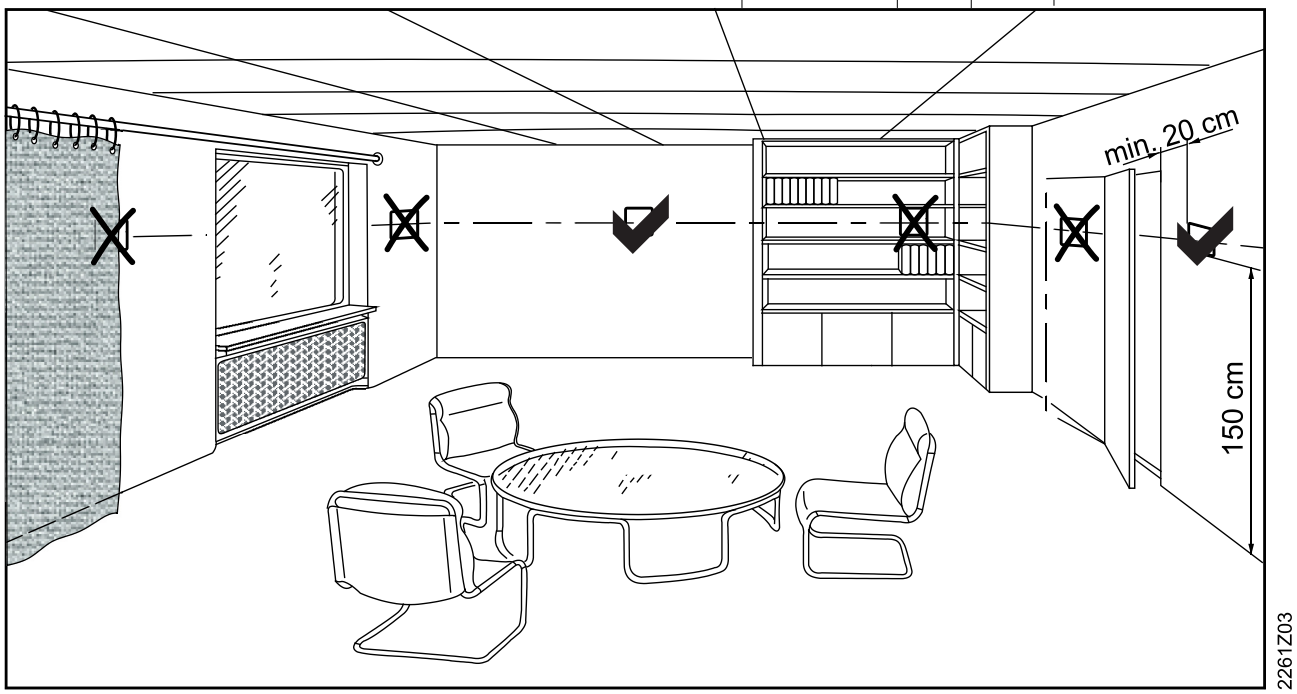

Install room units in the main occupancy rooms. The place of installation should be chosen so that the sensor can capture the room temperature as accurately as possible without getting adversely affected by direct solar radiation or other heat or refrigeration sources (about 1.5 metres above the floor)

The base provides the power for QAA55 and QAA75. When the units are removed from their base, power is cut off (i.e. the units are out of operation).

Connections:

Terminal	Designation	QAA55	QAA75
1	CL+	BSB data	BSB data
2	CL-	BSB ground	BSB ground
3	G+	Not used	Power supply DC 12V

5.4.2 Wired Room Units - QAA75 set up

Using the Room unit itself, enter "Commissioning mode" (see section on user levels) and select "Operator section" Use the following parameter lines to define the setup of this room unit:

Line	Display	Notes
28	Define adjustment confirmation message	With, Without
40	Define Unit as "Room Unit 1"	Supports HC1
	Define Unit as "Room Unit 2"	Supports HC2
	Define Unit as "Room Unit 3"	Supports HC3
42	Assign device (in line 40) to a heating circuit	HC1, HC2, HC3
44	Defines whether HC1 operates with HC2	(Together or
46	Defines whether HC1 operates with HC3	independent)
48	Defines which HC the occupancy button operates	HC1, HC2, HC3, ALL
54	Room temperature adjustment*	+/- 3°C
	*Engineer" level only.	

The following example illustrates applications available using the settings "Defined as" (operating line 40) together with "Heating circuit assignment" (operating lines 42 to 48). Existing heating circuits 1 and 2 are controlled centrally from room unit 1 for logistical reasons. The room temperature sensor in room unit 1 is relevant to heating circuit 1 only since climatic conditions for heating circuit 2 may differ from heating circuit 1. Room unit 2 allows for separate temperature measurements and individually setting of heating circuit 2. However, operating the occupancy button of unit 1 will activate all heat circuits.

Example settings:-

	QAA75, unit 1	**QAA75, unit 2**
Operating line 40	*Room unit 1*	*Room unit 1*
Operating line 42	*Heating circuits 1 and 2*	*Heating circuit 2*
Operating line 44	*Independently*	*Independently*
Operating line 46	*Independently*	*Independently*
Operating line 48	*Commonly*	*None*

5.4.3 Wired Room Units - QAA55 set up

Perform the following to access the room unit parameters:

- Press the occupancy button (> 3 seconds). The room unit switches to the service level. The first parameter is selected; the present value blinks.
- Use the setting knob to set the required parameter.
- Briefly press the occupancy button. The next parameter is selected for setting.
- Exit service level:

- After 8 seconds without activity, the room unit exits the service level. automatically
- Briefly press the operating mode button.

Parameter	Display	Function
Used as	ru = 1	The room unit is addressed as RU1 (default setting).
40	ru = 2	The room unit is addressed as RU2.
	ru = 3	The room unit is addressed as RU3.
Direct adjustment	P1 = 1	Automatic storage: (default setting) A set point readjustment with the knob is adopted either by pressing the operating mode button or without any further confirmation (time out).

Parameter	Display	Function
	P1 = 2	Save with confirmation: A set point readjustment with the knob is adopted only after pressing the operating mode button.
Operation lock	P2 = 0	OFF: All operating elements released (default setting).
	P2 = 1	ON: Following operating elements are locked: - Operating mode changeover heating circuit. - Readjustment of Comfort set point. - Changeover of operating level (occupancy button).

5.4.4 Outside Sensor - QAC series installation

Outside sensor NTC 1K. Passive sensor for acquiring outside temperature and to a small extent - solar radiation, the influence of the wind and the temperature of the wall.

It should be mounted so that it is not exposed directly to the sun (especially in the morning). In case of doubt it should be located on a wall facing North to North-West.

5.4.5 Basic Wired Thermostat Control

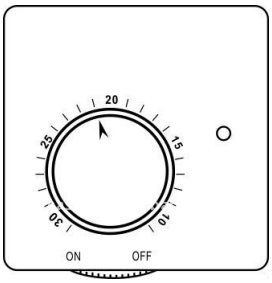

Install wall thermostats in the main occupancy rooms. The place of installation should be chosen so that the sensor can capture the room temperature as accurately as possible without getting adversely affected by direct solar radiation or other heat or refrigeration sources (about 1.5 metres above the floor) *See section 5.4.1 for illustration.*

Using the Left hand HMI of the appliance, enter "Commissioning mode" (see section on user levels) and select "Configuration" menu. Here are some examples for H2 definitions

Line	Display	Notes
6046	Define function input H2 mod 1	Setup as room thermostat HC1
6047	Define contact type H2 mod 1	Dependent on device (NO or NC)
6054	Define function input H2 mod 2	Setup as room thermostat HC2
6055	Define contact type H2 mod 2	Dependent on device (NO or NC)

5.5 FLUE & VENTILATION

5.5.1 Flue Positions

The flue discharge position for any flue type must conform to the following requirements:

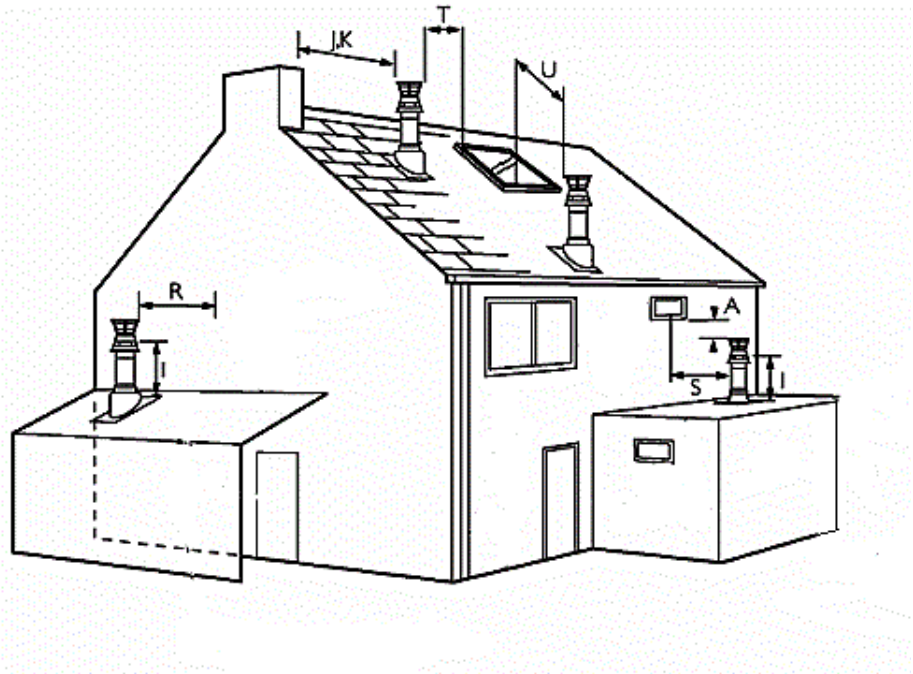

Key	Location	Minimum distance (mm)
A	Directly below an opening, air brick, opening window etc.	300
I	Above ground, roof or balcony level	300
J	From a surface or a boundary line facing a terminal	600
K	From a terminal facing a terminal (Vertical flue)	600
R	From an adjacent wall to flue (Vertical only)	300
S	From an adjacent opening window (vertical only)	1000
T	Adjacent to windows or openings on pitched and flat roofs	600
U	Below windows or opening on pitched roofs	2000

5.5.2 B_{23} Flue System

This is an open flued arrangement where the air for combustion is drawn from the room and because of this the room must be ventilated. If the boiler is installed in a compartment then it will require both a high level and a low level vent.

The flue products ***must be*** discharged vertically using any of the supplied separate duct components.

The maximum draught permissible is 0.2 mbar (20 Pa), this should be checked with a warm flue and the boilers not firing. If the draught is greater than this, then the fitting of a flue stabiliser is advised.

5.5.3 B_{23} Flue - Ventilation Requirements

Refer to BS 6644 clause 19 and BS 5440 part 2 for detailed recommendations.

The room in which an boiler is installed must have a permanent air vent to outside air or to a room which itself has direct access to outside air. Installations in boiler rooms require permanent vents for air supply purposes, one at high level and one at low level, direct to outside air. The minimum free areas required are as follows:-

Position of air vents	Area of free air required
Low Level	400 = 1,800 cm ²
	525 = 2,200 cm²
High Level	400 = 900 cm ²
	525 = 1,100cm²

Where the boiler is to installed in a compartment, permanent air vents are required at high and low level. These air vents must either connected with a room or internal space, or be direct to outside air. The minimum free air requirements in the compartment are as follows:-

Position of Air Vents	Air from room or Internal Space	Air direct from Outside
High Level	400 = 4,500 cm ²	400 = 2,250 cm²
	525 = 5,500 cm²	525 = 2,750 cm²
Low Level	400 = 9,000 cm ²	400 = 4,500 cm²
	525 = 11,000cm²	525 = 5,500 cm²

A compartment containing an open-flued appliance shall be labelled as follows:

IMPORTANT: Do not block the vents. Do not use the compartment for storage.

5.5.4 B_{23} Flue - Ventilation Seasonal Adjustments

Where a boiler is to operate in summer months, the above allowance should be sufficient, provided it does not operate for more than 50% of the time. If the boiler is to be operated at 75% then an additional 1cm² will be required per kW at low and high level. If the boiler is to be operated 100% of the time during the summer, an additional 2cm² free-area per kW will be required at low and high level.

5.5.5 Combustion Air - General conditions

There must be sufficient clearance around the boiler to allow proper circulation of combustion air. The clearances required for Installation and servicing will normally be adequate. *(See section 4.2.1)*

Combustion air must avoid contents including (but not limited to) chlorine, ammonia, alkali agents, halogenated hydrocarbons, freon, sheetrock particles, plasterboard particles, lint dirt and dust. Installation of the boiler near a swimming pool, washing machine or a laundry do expose combustion air to these contents.

The effect of any type of extract fan in the plant room must be considered and an additional air inlet may be needed from outside to counter the effect of any such fans.

5.5.6 Maximum Flue Lengths

The overall resistance of the combined flue pipe work and flue terminal must not exceed a pressure drop of:

Model	FS400	FS525
Max flue resistance	200 Pa	250 Pa

Each flue accessory such as bends and straight lengths restrict the flue system and decrease the boilers output. To ensure that the output of the boiler matches the approved rating on the data plate please do not exceed these values.

The effect of pressure resistance of the flue system on the output of the boiler is given in the following table:

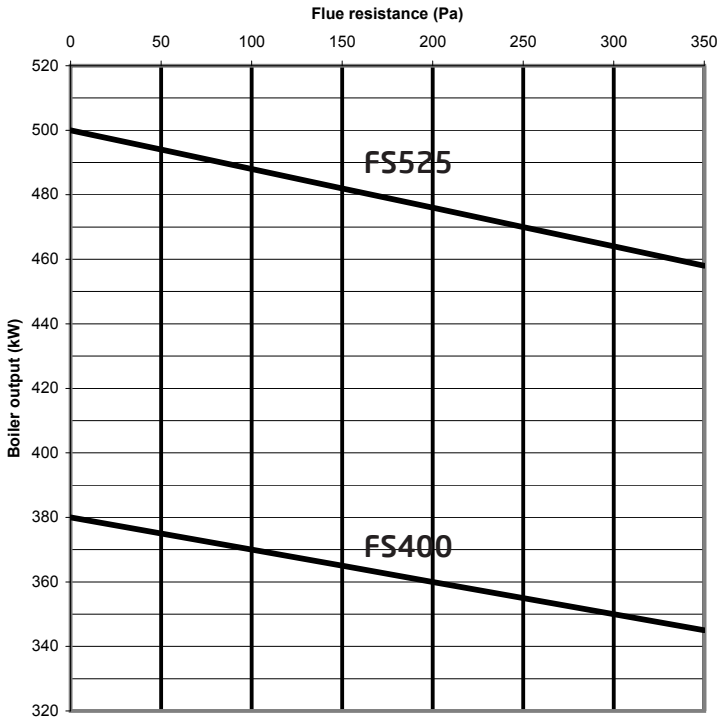

The following table can be used as a guide when calculating the flue outlet resistance, please refer to flue manufacturers instructions where possible :

Model : FS400	Item	Resistance Pa	
		Flue diameter 180mm	Flue diameter 200mm
	Straight (1m)	3.0	1.8
	T-piece boiler outlet	25.5	16.7
	90º elbow	9.9	6.5
	45º elbow	5.7	3.7
	Flue terminal (Zeta = 0.05 conical)	1.4	0.9
	Flue terminal (H/D = 1.0, Zeta = 1.0)	28.3	18.6
	Flue terminal (H/D = 0.5, Zeta = 1.5)	42.4	27.8
	Flexible Flue Liner (per meter)	7.4	4.7

Model : FS525	Item	Resistance Pa		
		Flue diameter 180mm	Flue diameter 200mm	Flue diameter 250mm
	Straight (1m)	5.0	3.0	1.0
	T-piece boiler outlet	45.3	29.7	12.2
	90º elbow	17.6	11.6	4.7
	45º elbow	10.1	6.6	2.7
	Flue terminal (Zeta = 0.05 conical)	2.5	1.7	0.7
	Flue terminal (H/D = 1.0, Zeta = 1.0)	50.4	33.0	13.5
	Flue terminal (H/D = 0.5, Zeta = 1.5)	75.6	49.6	20.3
	Flexible Flue Liner (per meter)	13.7	8.9	3.5

Worked Example:

An FS525 boiler is to be installed on a B_{23} type flue. The installation would require:
1 x T-piece, 2 x 1m Straight lengths, 3 x 45º Elbows, 1 x 90º Elbow, 8m of flexible flue liner and a flue terminal. The calculation would be as follows:

Model: FS525	180mm Flue outlet size		
Item	**Quantity**	**Pa each**	**Pa Total**
T-piece boiler outlet	1	45.3	45.3
45º Elbow	3	10.1	30.3
90º Elbow	1	17.6	17.6
1m Straight lengths	2	5.0	10.0
Flexible flue liner (m)	8	13.9	110.8
Flue Terminal (H/D 1.0, Zeta 1.0)	1	50.4	50.4
Total Flue Resistance (Pa)			**264.4**

The total resistance is over 250 Pa, so this 180mm flue system would not be acceptable. Therefore a larger diameter flue system is required.

Model: FS525	200mm Flue outlet size		
Item	**Quantity**	**Pa each**	**Pa Total**
T-piece boiler outlet	1	29.7	29.7
45º Elbow	3	6.6	19.8
90º Elbow	1	11.6	11.6
1m Straight	2	3.0	6.0
Flexible flue liner (m)	8	9.1	72.8
Flue Terminal (H/D 1.0, Zeta 1.0)	1	33.0	33.0
Total Flue Resistance (Pa)			**172.9**

This system is still restrictive *(see flue resistance table page 33)* but the total resistance is under 250 Pa, so this 200mm flue system would be acceptable.

If the same calculation was applied to a 250mm diameter flue system, the total resistance would be 70.1 Pa, which equates to an output increase of 10kW, from a 180mm flue system.

5.6 GAS CONNECTION AND TIGHTNESS TESTING

5.6.1 Gas Supply

This boiler is designed to operate using Natural Gas (G20) only. DO NOT attempt to convert or operate this boiler using LPG (G31).

The data plate on the boiler must be checked with the local supply conditions of the gas supply before installation can commence. Gas used should have sulphur rates inside the European standards in force. An annual average rate of 30mg/m^3 or lower with peaks of 150mg/m^3 is acceptable .

A manual valve for isolation of the gas supply to the boiler should be installed nearby and it should be clearly identified and readily accessible for use at all times. The installation of the gas supply must conform, to the standards and codes of practice in force at the time of installation (see section 2.3 for guidance). It is recommended that the gas supply pipe work is fitted with a suitable union so that the boiler can be safely removed for major service or repair.

The gas meter, regulator and supply pipe work must be sized so as to provide an adequate supply to the boiler in addition to any other appliances connected to the supply. (See section 3.2 for G20 gas consumption rates)

5.6.2 Gas Connection

A Male 2" BSP steel gas connection is provided at the top of the boiler. A running pressure of 20.0mb (+/- 1.0mb), must be available at the boiler supply inlet, with this boiler and other connected appliances operating at maximum output.

5.6.3 Tightness Testing

The entire gas inlet pipe must be checked for leakages before commissioning, up to a maximum pressure of 150mbar. The gas line has to be purged of air before commissioning following the guidelines set out in IGE/UP/1. Check for tightness of any disturbed joints using a leak detector fluid after purging.

6.0 COMMISSIONING

After installation of the pipe work and fittings, open the main water supply valve, flush the system and fill the boiler and its heating circuits. The boiler should be commissioned utilising the heating circuit.

6.1 SWITCHING ON

Turn on the switched spur supplying electricity to the boiler.

Open the front facia flap and turn on the boiler. The display should then proceed with system start up checks, which may take several minutes. When the boiler has finished these checks, it should be displaying the default screen “Cascade flow temperature”, on the left hand side HMI display screen. The right hand HMI display screen should be displaying “Boiler temperature”.

6.2 ENGINEERS TOOLS AND USE OF CONTROLLER STOP

For setting and controlling the CO_2 values operated in the **control stop function**.

1. 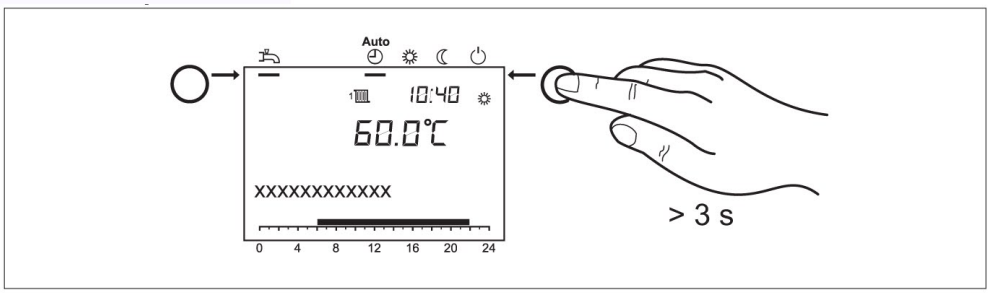

   Press operation mode button Heating Operation for **approximately 3 seconds**
   => the message *Controller Stop Function ON* is displayed.

2. Wait, until the display has reached the basic display again.

3. 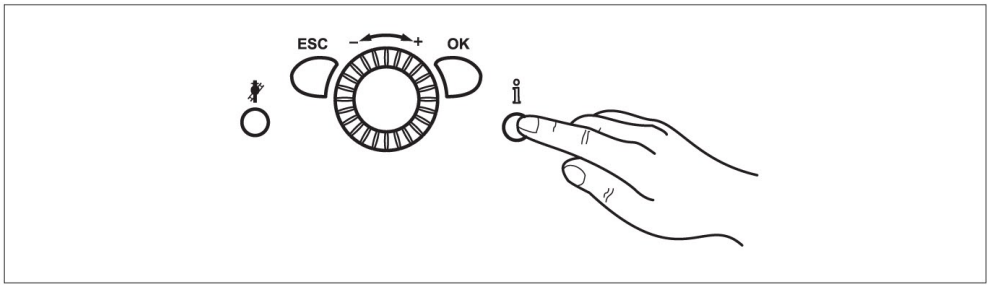

   Press information button
   => The message *Controller stop setpoint adjust* appears in the display. The actual modulation degree will be displayed on the display.

4. Press OK button
   = > The nominal value can now be changed.
5. Press OK button
   => The displayed nominal value is taken over by the control.

Note: The regulator stop function is stopped by pressing the *operating mode button Heating Operation* for approximately 3 seconds, reaching the maximum boiler temperature or a time limit.

6.3 CHECKING AND ADJUSTING CO_2 LEVELS

The gas mixture and burner gas rate is factory set. However, it is an important part of commissioning to check the gas rate of the boiler and that the combustion emission levels are correct.

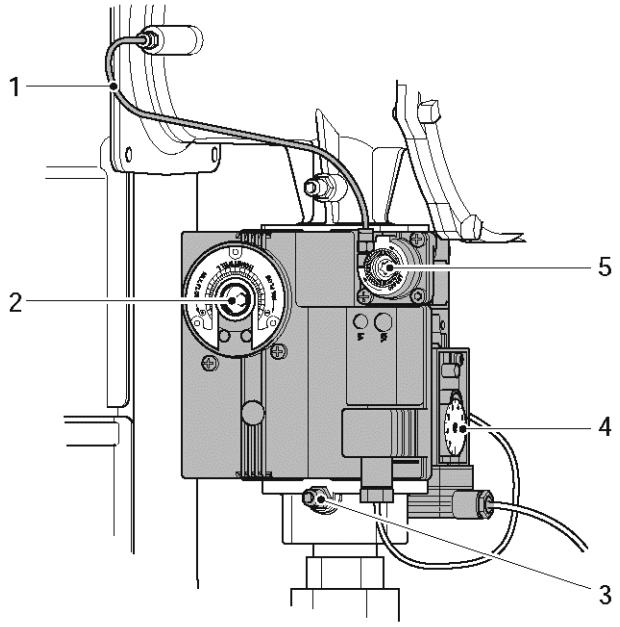

1. Compensation line
2. Full load adjustment screw
3. Pressure measurement Point
4. Minimum gas pressure switch
5. Low load adjustment screw

Set CO_2 content at max. output

- Place boiler in to controller stop mode (refer to section 6.3). Operate at 100% load.
- Remove safety cap from adjustment screw (2) for full load.
- Set CO_2 content on the adjustment screw (2) for full load, according to the ***performance data (section 3.2)*** with a 3mm Allen key. Ensure CO levels do not exceed 150 ppm.
    - Clockwise: CO_2 content is decreased
    - anti-clockwise: CO_2 content is increased
- Replace safety cap on the adjusting screw (2)

Set CO_2 content at min. output

- Place boiler in to controller stop mode (refer to section 6.3). Operate at 0% load.
- Remove safety cap from adjustment screw (5) for low load.
- Set CO_2 content on the adjustment screw (5) for low load, according to the ***performance data (section 3.2)*** with a TX40 Torx key. Ensure CO levels do not exceed 150 ppm.
    - Clockwise: CO_2 content is increased
    - anti-clockwise: CO_2 content is decreased
- Replace safety cap on the adjusting screw (2)

Note: There is a time delay between making an adjustment and the CO_2 value changing on the gas analyser. Adjust in increments of 1/8 turn at a time and wait at least 1 minute before making further adjustments. NB 1/2 turn = 1.0% CO_2

Note: After successful adjustment of the gas valve, the CO_2 content must again be confirmed at both low and high load output. Adjustment of the maximum output rate will also change the minimum output rate. Adjust rate at low and high output if necessary.

Too high a CO_2 value can lead to incomplete combustion, high CO values and damage to the burner.

Too low a CO_2 value can lead to ignition problems

In case of installation in areas with fluctuating natural gas composition, the CO_2 contents should be adjusted in accordance with the Wobbe Index at any given time (refer to gas supply company).

The CO_2 content can be decided as follows:

CO_2 content = $9.3 - (Wo_N - Wo_{current}) * 0.5$

6.4 DECOMMISSIONING, DISPOSAL AND RECYCLING

Only qualified competent persons should decommission and dismantle the appliance.

Before dismantling and removing please ensure you safely remove the power supply and isolated the appliance from the water and gas connections.

Dispose of the appliance correctly according to the laws and regulations in force. The appliance and accessories cannot be discarded along with normal household waste and should be recycled where appropriate.

More than 90% of the materials that make up the appliance are recyclable.

6.5 CONTROLS AND BASIC SETTINGS

6.5.1 Boiler Controls (left hand HMI screen)

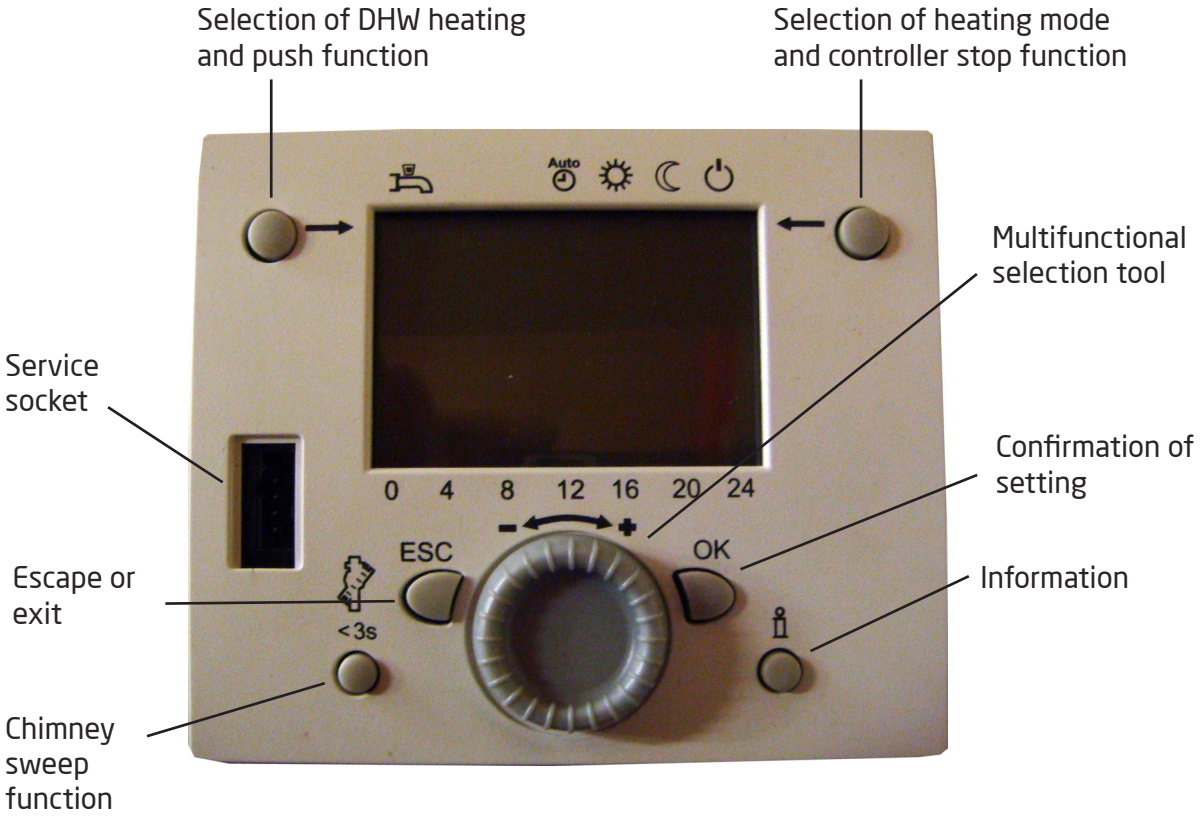

Chimney sweep function
A short press (<3 seconds) enables the chimney sweep mode. It provides maximum loading for flue gas emission measurements

Controller stop.
A long press (>3 seconds) enables the controller stop operating mode. This overrides the heating demand and forces the individual burner to operate manually. The level of modulation can be controlled by pressing the information button and selecting a modulation level.

Push function
A long press (>3 seconds) enables the DHW Push function. This will give sole priority to the heating of DHW and cannot be cancelled once activated. Once DHW has reached set temperature the controls return to normal operating mode.

Info
Pressing this button steps through a number of parameters on the display, they can also be stepped by rotating the multifunctional selection tool. If a fault has been detected this will also appear in the screen list.

6.5.2 Guide to Display Symbols

Hot water selection modes

Hot water on / off

Heating selection modes

AUTO Timed heating programme

Permanent Comfort temperature

Permanent Reduced temperature

Standby by with Frost protection

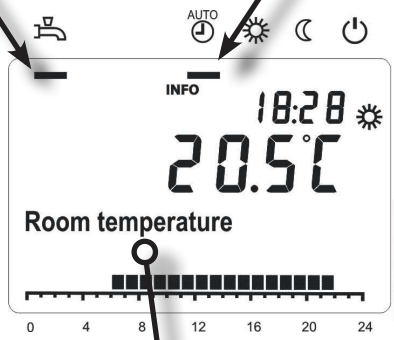

Frost protection mode

Holiday function active

Reference to active heating circuit

Burner Operating

Maintenance or special mode.
If this symbol appears, a maintenance message is delivered or a special operation has been manually activated.

Error message
If this symbol appears for more than 30 seconds, an error in the appliance has occurred

INFO Info level activated

PROG Programming activated

ECO Heating temporarily switched off, ECO function active

6.5.3 Setting the Time and Date

Basic display:

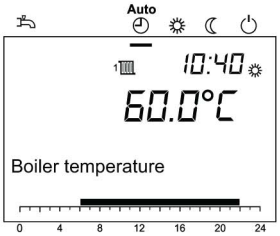

Press OK.

Select the menu point **time and date** with .

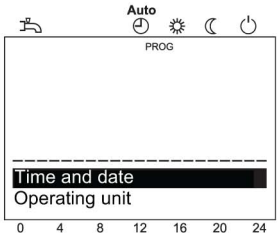

Acknowledge selection with OK.

Select the menu point **hours/minutes** with .

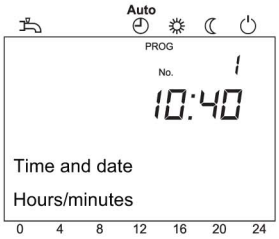

Acknowledge selection with OK.

Carry out hour setting (e.g. 15 hours) with .

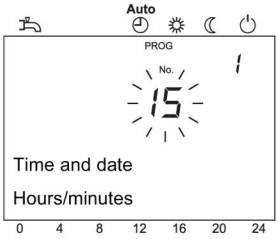

Acknowledge setting with OK.

Carry out minute setting (e.g. 30 minutes) with .

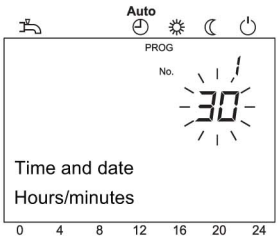

Acknowledge setting with OK.

6.5.4 Setting Heating and DHW Time Schedule

When setting times for periods for which a heating circuit or DHW may operate, it is worth noting that the times set will be subject to a variance if start or stop optimisation is turned on. If optimisation is turned on, the operating times set will need to be the occupancy times of the building, as the controller will turn on the heating to bring the room temperature up to set level in time for the 1st on period. The default screen is displayed when the ESC button is pressed several times and the screen displays "Cascade temp" or "Boiler temp"

The heating time schedule point can be altered by performing the following actions from the default screen:

1. Press OK
2. Using the scroll wheel select appropriate circuit e.g. "Time Prog heating circuit 1" or "Time program 4 / DHW".
3. Press OK
4. Set the desired day or week period required for time control to be active by pressing OK and then using the scroll wheel to select appropriate period e.g. "Mon - Fri"
5. Press OK
6. Rotate scroll wheel and select "1st phase on". Press OK to change 1st time on with scroll wheel.
7. Press OK
8. Rotate scroll wheel and select "1st phase off". Press OK to change 1st time off with scroll wheel.
9. Press OK button
10. Repeat steps 6 - 9 for up to 3 periods of on and off times.

6.5.5 Setting the Hot Water Temperature

The DHW set point can be altered by performing the following actions from the default screen:

1. Press the OK button
2. Using the scroll wheel select "Domestic Hot Water", press OK
3. Press OK, the temperature should now be flashing. Use the scroll wheel to set desired temperature, press OK
4. Press ESC twice to return to default display

(See separate User Guide for more detail on setting both heating, hot water temperatures and times)

6.6 ERROR MESSAGES

If the control system is unable to operate a burner or detects a safety condition, the control will lockout and prevent the use of the defective component and it's related system. The display will show the 🔔 symbol and the green LED on the appropriate control PCB green LED will flash. The fault will have to be cleared before the boiler can fully function again.

Pressing the info button will provide details of the fault *(see section 7.7)*. Press the RESET button and provided the fault condition has been corrected, the boiler will operate as normal and the fault symbol will disappear from the display, after a short delay.

6.6.1 Lockout Display

The Display will show a 🔔 if the boiler has locked out. More information can be obtained by pressing the Info button on the HMI display screen. Example screen:

```
INFO

00:02

Error
30:Flow sensor 1
```

The number on the display indicates the number of the PCB that the fault has occurred on In this example a flow sensor error has occurred on the second burner (PCB 2).

6.6.2 Engineering Mode - further fault detail

To enter Engineer Mode:

- Press OK then hold down the Info button for more than 3 seconds.
- Select Engineer from the list using the Wheel, then press OK.
- Use the Wheel to scroll down to 'Fault' and press OK.
- Step through the lines 6800 to 6995 to list the last 20 faults. The first screen gives the general fault and the time and date of its occurrence. Example screen:

```
Prog
  No  6800
09:32
26.01.2012
 Fault
History 1
133: Safety Time Exceeded
```

Page two of fault history records specific details about what the software and controls were indicating at the precise moment the fault occurred. Example screen:

```
Prog
  No  6805
625

Fault
SW diagnostic code 1
Burner control phase 1   3
```

A complete listing of displayed fault codes is given in the Operating and Programming guide.

6.7 FINAL CHECKS & USER HANDOVER

Check the individual burners maximum rate and combustion are to specification. Operate the boiler at maximum loading and check gas consumption against the guidance table below to ensure the rating is correct.

Guidance on meter readings:

Rating Table (1040 Btu/ft³) (38.8 MJ/m³)				
Model	**Nominal input kW (gross)**	**Nominal input Btu/h (gross)**	**Consumption time for 5 ft³ of gas**	**Consumption time for 0.1 m³ of gas**
FS400	422	1,440,000	13.0s	9.2s
FS525	555	1,890,900	9.9s	7.0s

When commissioning is satisfactorily completed the user must be instructed on the use and operation of the boiler and in particular detail:

- Hand over to the user the "Programming guide" as well as all other literature relating to the appliance.
- Explain the importance of air vents and the flue outlet system, and that they should not be altered or interfered with in any way.
- Explain to the user the importance of internal water pressure and how to restore it to the correct value if required.
- Explain and demonstrate to the user the correct function and adjustment of the temperature, thermostats and radiators for the economic use of the system.
- Remind the user that in order to comply to the regulations in force the boiler has to be inspected and serviced regularly as indicated by the manufacturer.
- Explain the frost protection systems for this appliance:

  If the internal water temperature of the appliance falls below 8°C the system pumps will operate to circulate water around the system. If the internal water temperature drop below 5°C, a burner will be activated to bring the internal water temperature up 16°C.

  NB. Other Frost protection levels can be set according to the options fitted and the requirements of the customer. See Operating and Programming guide for more details
- Explain that an anti-legionella programme is available for the DHW system, but is defaulted to be off, but can be activated if required.
- Explain that at 10:00 every Friday the boiler will cycle every pump controlled by it, for approximately 30 seconds each. This is a feature designed to reduce the instances of pump seizure, when the system is not in use (*subject to the boiler being in control of the pumps rather than an external BMS).*

Finally, these instructions should be handed over to the user for safe keeping.

7.0 MAINTENANCE

7.1 ROUTINE INSPECTION INTERVALS & REQUIREMENTS

Health and Safety Statement : This boiler contains no asbestos.
In all cases, before work commences turn off the mains electricity and gas supply.

To ensure continued efficient operation of the boiler it is recommended that it is checked and serviced at regular intervals. The frequency of servicing will depend upon the particular installation and usage of the boiler, therefore a service after **4,000 hours** of burner operation is recommended, with a minimum requirement to annually service the boiler every twelve months from initial commissioning date.

It is a legal requirement that any service work or maintenance should be carried out by competent registered personnel.

7.1.1 Minimum inspection requirements

During routine inspection and servicing and after any maintenance or change of part of the combustion system, the following actions **must** be performed:

- Check the integrity of the combustion chamber, relevant seals and heat shields
- Check condition of ignition spark and sensing electrodes
- Check the integrity of flue seals
- Check condensate syphon and pipe work for leaks
- Check the combustion CO, CO_2 and gas running pressure
- Clean out filter/strainer in return system
- Check the water inside the boiler is free of air and the automatic air vent operation
- Follow the procedures given in section 7.3 for full details on inspection and parts removal.

Once maintenance has been completed, it is recommended that the counters for burner hours since maintenance and time since maintenance are reset *(parameter lines 7041 & 7045)*

7.1.2. Recommended inspection operation

It is recommended that the following actions should be carried out prior to shutting down the boiler before servicing work is carried out:-

- Check the starting and running of each combustion fan.
- Check for smooth ignition of each heat engine.
- Check for gas and products of combustion leakages when operating.
- Check for signs of fluid leakages, either from condensate or water channels
- Inspect flue, joints must be sound and correctly supported and there must be sufficient fall back to allow condensate to run back to the boiler.
- With the boiler operating at a low return temperature (below 50°C) check that condensate flows freely from the condensate line.
- Carry out analysis of system water to ensure good water quality (see section 4.4.3)

It is recommended that the following actions should be carried out with the boiler isolated from the electrical and gas supply :-

Burner Head

Remove the burner head *(see section 7.3.16 & 7.3.17, P58)* and inspect the condition of the burner head. Discolouration or black markings may indicate an incorrect gas mixture or air vent blockage. Replace the burner head if there is any visible damage.

Insulation

Inspect the condition of the heat insulation at the rear of the heat exchanger and on the heat exchanger door. The heat insulation material must be changed if there are any signs of water damage or other significant degradation.

Gaskets

Inspect the condition of the door rope gasket, silicone lip gasket and the gasket connecting the air flap to the burner door. Replace if the rope gasket if it is damaged. *Replace the gaskets if they appear worn, brittle or damaged.*

Ignition and ionisation electrodes

clean all electrodes with a fine wire brush and check the ceramic insulation is free from cracks or damage. Check the ignition electrode gap is between 4 & 5mm. Replace any defective electrodes, ensuring that a new electrode gasket is fitted.

Air control valve

Inspect condition of seal around the interior of the air control valve and check operation of the valve. The valve should close securely on its magnet and open with a little resistance.

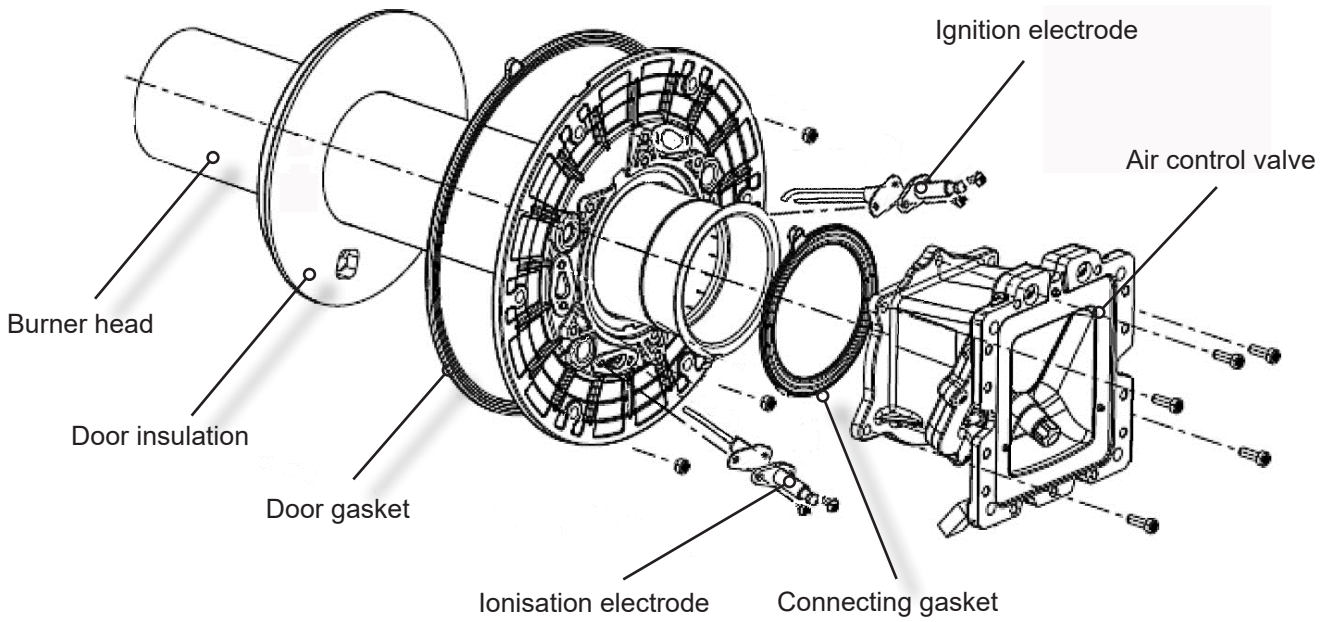

Heat Exchanger

Inspect the condition of the heat exchanger for signs of damage. If necessary, clean the heat exchanger using a suitable stiff nylon brush. Vacuum out any large particles and flush the heat exchanger with fresh water. For stubborn deposits, white vinegar can be applied to the coils (with a hand spray gun) and left for 3 mins. Use a stiff nylon brush to remove deposits and then flush coils with plenty of fresh water, until the water flowing from the condensate drain is clear.

Do not use any liquid except white vinegar to clean the heat exchanger, as this may result in heat exchanger damage and invalidate the manufacturers warrantee.

Siphon

Remove siphon trap at the rear of the boiler. Remove the bowl and clean out any deposits, refill the bowl and replace siphon. The condense system can then be tested by pouring clean water into the heat exchanger. The water should exit through the siphon.

Fan

Inspect impeller and if necessary clean carefully with a soft brush to remove the build up of dust particles. Be careful when cleaning the fan to avoid force which may cause the fan to become unbalanced.

It is recommended that the following actions should be carried out after the above checks have been completed, the boiler has been re-assembled and reconnected to the electrical and gas supply :-

Flue gas piping

Inspect flue piping for gas tightness, damage, correct support and traces of water leaking from these pipes. Check if there is any condensate leaking from the flue pipe work.

Gas supply piping

Inspect the gas supply pipe work and ensure that is gas tight, undamaged, correctly supported and installed according to regulations in force. When the boiler is in operation, check that there is sufficient gas pressure available to operate the boiler safely.

Combustion analysis

Run each burner individually on both maximum and minimum output, to check that the boiler is modulating correctly and that the CO and CO_2 readings are correct. Refer to section 6.4 (P40), for full details on how to check and adjust CO_2 levels.

Function Check

Run the boiler through a full heating / DHW cycle and note any operational errors. Ensure that all errors are corrected before completing any maintenance / servicing.

7.2 SERVICE ACCESS TO COMPONENTS - FRONT

When performing a service or part replacement, in order to gain better access to the components at the front of the boiler, the following panels can be removed:

1. Undo 1/4 turn fasteners and lift panel vertically upwards
2. Remove the locking screw and slide rail backwards 15mm, then lift rail vertically upwards
3. Undo 1/4 turn fasteners and pull top of door outwards and lift door upwards
4. Remove 4 screws from the top and 2 screws from the bottom of panel and pull outwards
5. Remove 2 screws on front of panel and loosen 2 screws at rear of panel and pull forwards

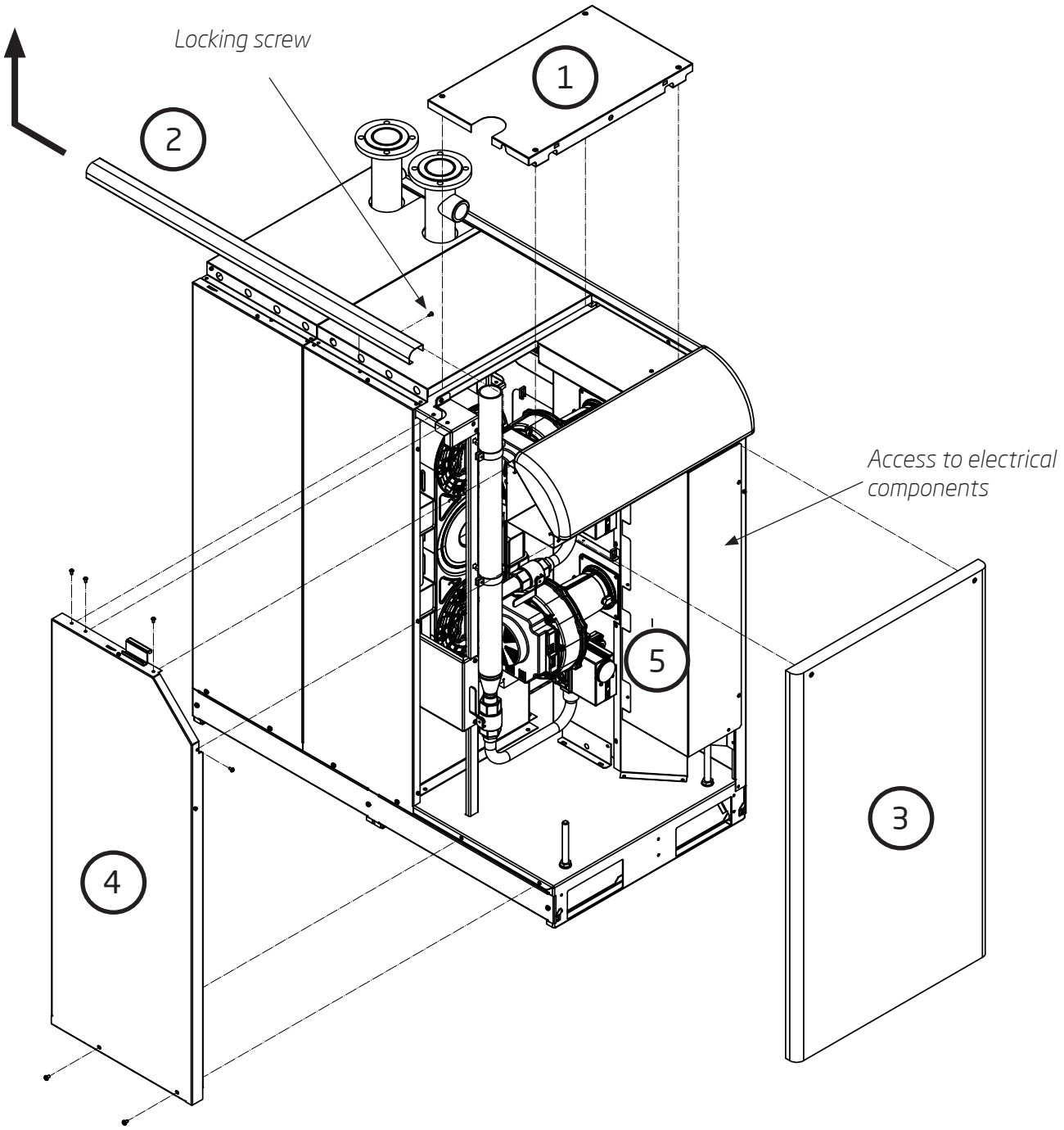

7.2 SERVICE ACCESS TO COMPONENTS - SIDE & REAR

When performing a service or part replacement, in order to gain better access to the components at the rear and side of the boiler, the following panels can be removed:

6 Remove six screws to reveal access to: Flow sensor, water pressure transmitter & flow over heat cutoff device

7 Remove six screws to reveal access to: Return sensor, Cascade sensor, condense / blocked flue pressure switch, condense pipe work, upstanding pipe work couplers

8 Remove four screws to reveal access to: Flue sample point & rear overheat protection fuse

9 Remove four screws to reveal access to: Rear overheat protection fuse

10 Remove two screws to reveal access to: Adjustable levelling feet

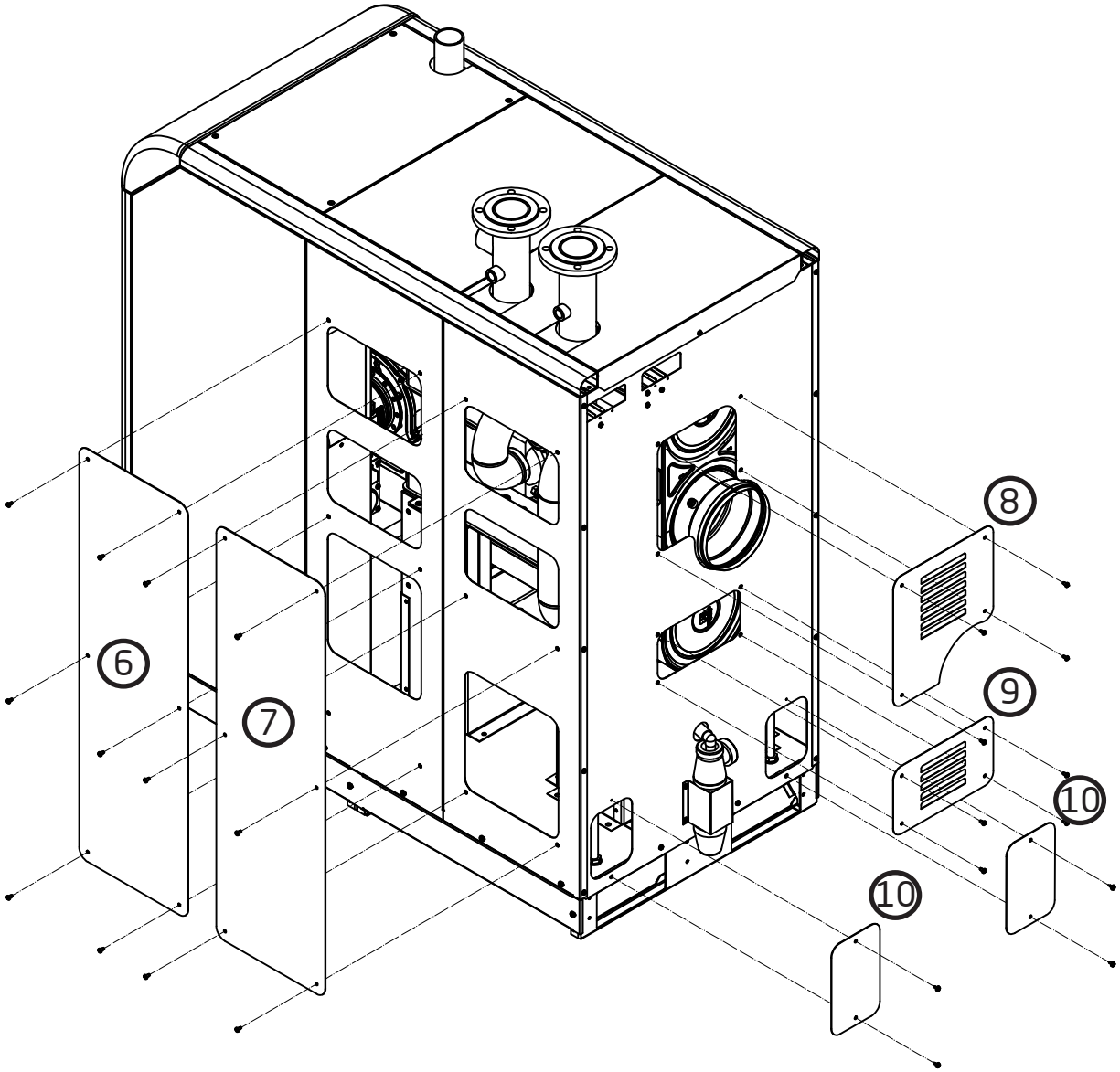

7.3 REMOVAL, INSPECTION AND CHANGING OF COMPONENTS

None of the controls or electronic components are repairable, if they are defective they must be replaced

In all cases, before work commences turn off the Mains Electricity and Gas Supply.

The following major components can be replaced and the methods for removal are listed in the following sections:

7.3.1 - HMI display screen
7.3.2 - Heat engine boiler control PCB (LMS14)
7.3.3 - LPB communications bus
7.3.4 - LMS14 Interface PCB
7.3.5 - Relays
7.3.6 - Flow and return temperature sensors
7.3.7 - Water pressure transmitter
7.3.8 - Flow high temperature limit thermostat
7.3.9 - Rear High temperature thermal fuse
7.3.10 - High temperature door limit thermostat
7.3.11 - Spark generator
7.3.12 - Spark and ionisation electrodes
7.3.13 - Combustion fan
7.3.14 - Gas valve
7.3.15 - Air control valve
7.3.16 - Burner head removal with fan removed
7.3.17 - Burner head removal with air control valve removed
7.3.18 - Combustion chamber inspection & cleaning
7.3.19 - Rear heat exchanger insulation replacement

7.3.1 HMI Display Screen

- Hinge up the control panel plastic cover.

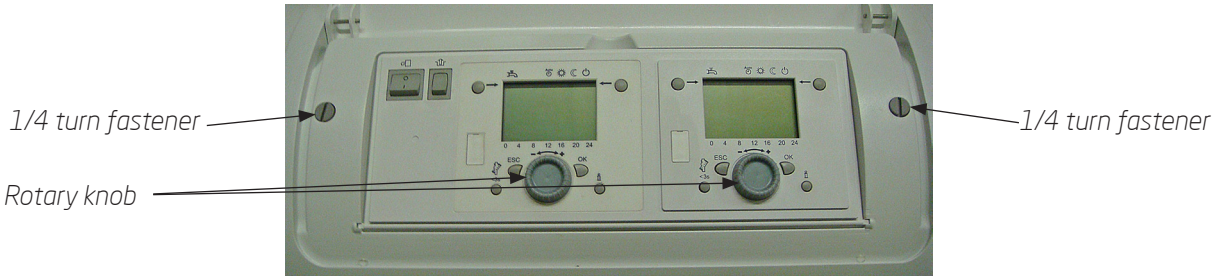

- Remove rotary control knob from front of HMI by pulling outwards
- Using a flat bladed screwdriver undo the two 1/4 turn fasteners above) until they pop upwards slightly
- Hinge whole display panel forward until the rear of the display is visible

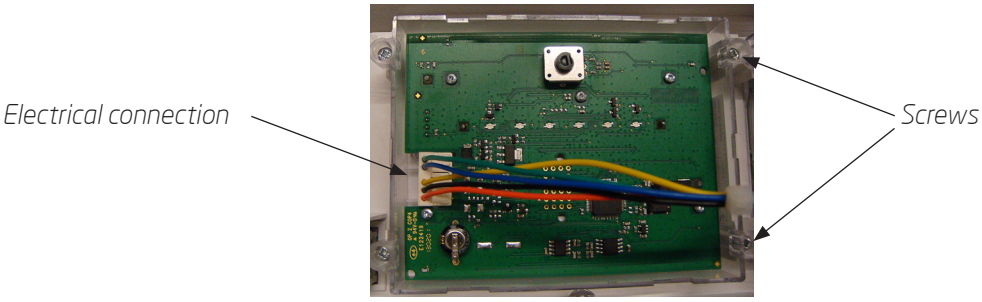

- Disconnect the electrical connection
- Using a screwdriver unscrew all 4 screws securing the HMI to the panel
- Remove display
- Replacement is the reverse

7.3.2 Heat Engine Boiler Control PCB (LMS14)*

- *See Section 7.2 (items 3 & 5) for access to electrical components*
- Carefully pull off all the connectors on the PCB.
- Release all 7 PCB supports by pinching the end of each pilar with a pair of pliers and slowly withdraw the board from the supports.
- Replacement is the reverse.

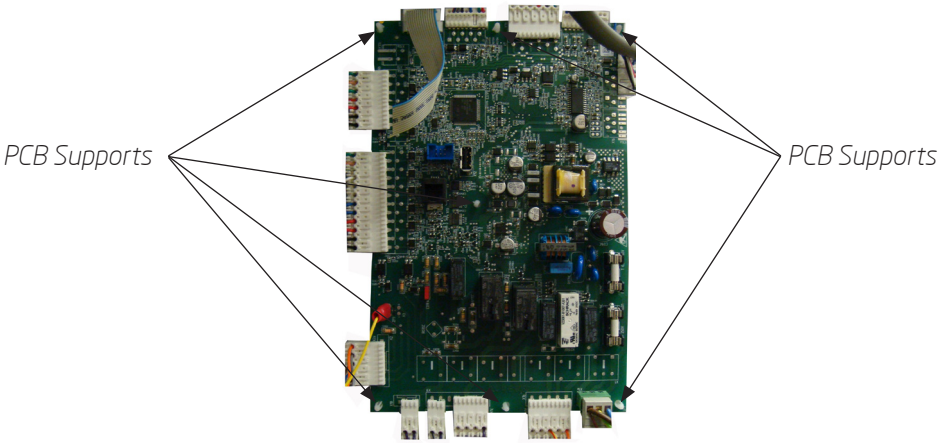

Follow instructions supplied with the PCB replacement, in order to ensure the correct parameter programming is used.

7.3.3 OCI345 - LPB Communications Bus

- *See Section 7.2 (items 3 & 5) for access to electrical components*
- Carefully remove connectors

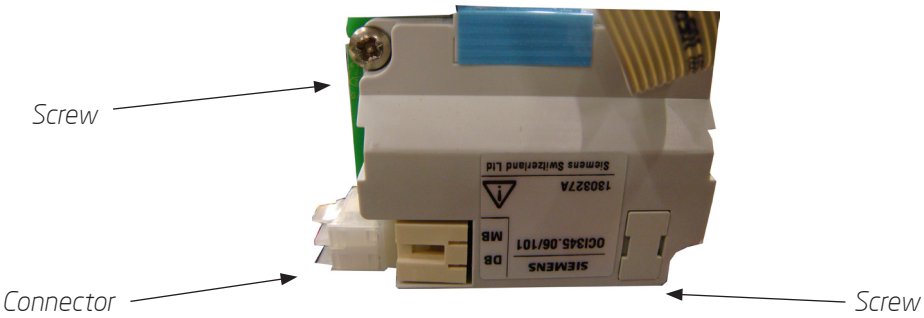

- Undo the nuts securing the LPB onto the metal panel
- Lift LPB from panel
- Replacement is the reverse

7.3.4 LMS14 Interface PCB

- *See Section 7.2 (items 3 & 5) for access to electrical components*
- Carefully pull off all connectors on the PCB
- Undo the one nut providing earthing to the PCB.

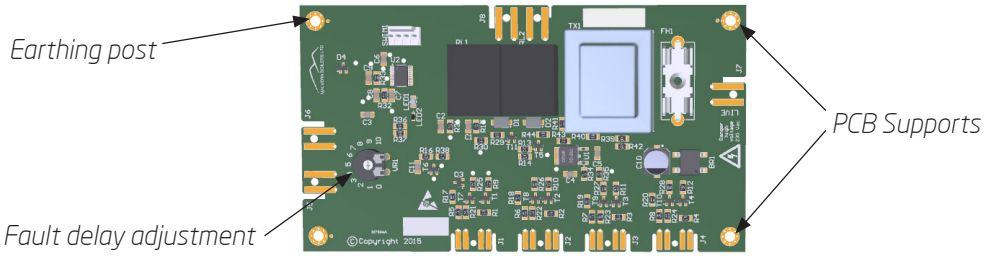

- Release the 3 PCB supports by pinching the end of each pillar with a pair of pliers and slowly withdraw the PCB from the supports
- Replacement is the reverse
- Set fault delay using the adjustable pot (0 - 10 minutes)

7.3.5 Control Relays

- *See Section 7.2 (items 3 & 5) for access to electrical components*
- Remove the relay by pushing the release bar upwards

- Fit new relay (note pin alignment) by gently pushing the relay into the holder. When correctly fitted the release bar can be returned to its original position

7.3.6 Flow and Return Temperature Sensors

- *See section 7.2 (items 6 & 7) for access*
- Valve off and / or drain down primary system to minimise spillage
- Remove left hand side panel to access flow temperature sensor / Remove right hand side panel to access return temperature sensor.
- Unplug electrical connector from sensor
- Unscrew sensor from heat exchanger
- Replacement is the reverse

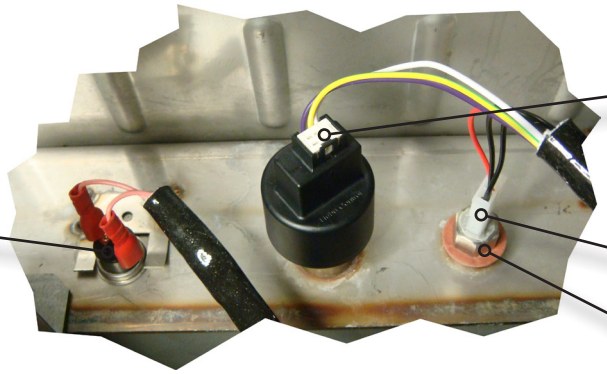

7.3.7 Water Pressure Transmitter

- *See section 7.2 (item 6) for access*
- Valve off and / or drain down primary system to minimise spillage
- Remove front left hand side panel
- Unplug the electrical connector from the transmitter (taking note of the connection position)
- Unscrew pressure switch from heat exchanger
- Replacement is the reverse

When replacing any item screwed directly into the heat exchanger, there will always be a quantity of water which will escape from the opening. In order to minimise water loss place a small container directly below the item being changed and perform the exchange as quickly as possible.

7.3.8 Flow High Temperature Limit Thermostat

- *See section 7.2 (item 6) for access*
- Unplug electrical connectors and remove sensor from under the clamp
- Replacement is the reverse

7.3.9 Rear High Temperature Thermal Fuse

- *See section 7.2 (items 8 & 9) for access*
- Unplug electrical connectors and remove sensor from under the clamp
- Replacement is the reverse

Inspect the condition of the insulation at the rear of the affected heat exchanger chamber before attempting to operate the boiler again. Failure to do so could result in permanent damage. See section 7.3.18 for insulation replacement guidance.

7.3.10 High Temperature Burner Door Limit Thermostat

- *See section 7.2 (item 3) for access*
- Remove the front access door using a flat bladed screwdriver to release the catches at the top of the door. Lift the top of the door outwards and then upwards to remove it
- Unplug electrical connectors from either side of the thermostat
- Unscrew body of thermostat from heat exchanger door
- Replacement is the reverse

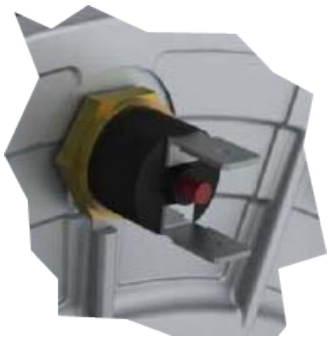

Before operating the boiler after replacement of this thermostat, inspect the insulation attached to the inside of the heat exchanger door , to ensure that it is complete and undamaged. Failure to do so could result in permanent damage.

7.3.11 Spark Generator

- *See section 7.2 (item 3 for access)*
- Remove the front access door using a flat bladed screwdriver to release the catches at the top of the door. Lift the top of the door outwards and then upwards to remove it.
- Unplug the power connector and ignition lead from unit
- Remove screws fixing the generator to the metal back plate
- Remove unit
- Replacement is the reverse

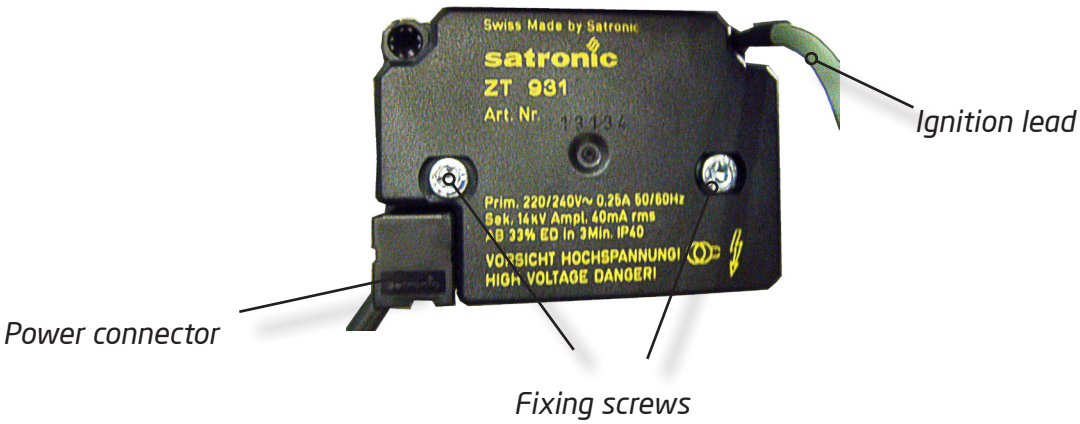

7.3.12 Spark & Ionisation Electrodes

- *See section 7.2 (item 3) for access*
- Remove the front access door using a flat bladed screwdriver to release the catches at the top of the door. Lift the top of the door outwards and then upwards to remove it.
- Remove connection lead
- Using a torq tool unscrew the two screws holding the electrode and remove
- Replacement is the reverse (new gasket recommended)

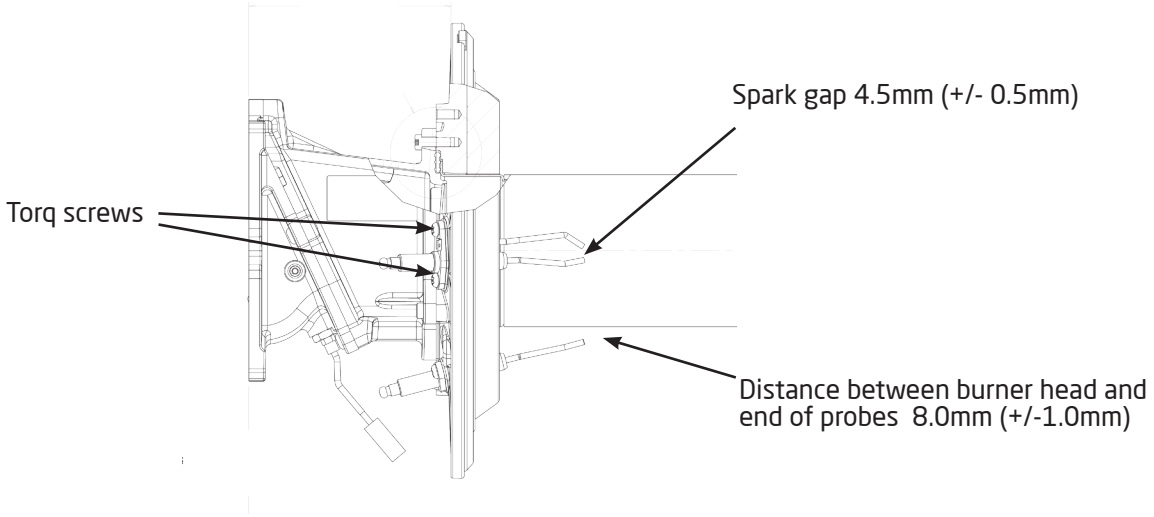

7.3.13 Combustion Fan

- *See section 7.2 (items 1, 2, 3 & 4) for access*
- Remove the front access door using a flat bladed screwdriver to release the catches at the top of the door. Lift the top of the door outwards and then upwards to remove it.
- Unplug the two electrical connectors from the rear of the fan

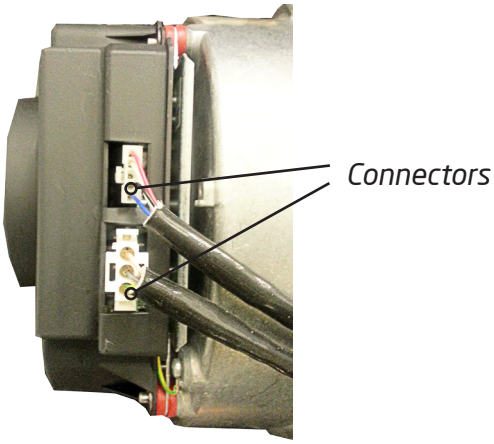

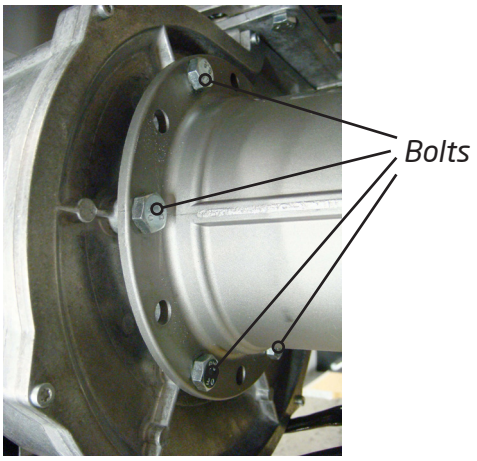

- Remove the six bolts connecting the fan to the venturi
- Remove the four bolts connecting the fan to the air control valve / burner
- Remove fan
- Replacement is the reverse

7.3.14 Gas Valve

- *See section 7.2 (items 3) for access*
- Remove the front access door using a flat bladed screwdriver to release the catches at the top of the door. Lift the top of the door outwards and then upwards to remove it.
- Remove the air connection from the valve by pushing the face of the connector inwards whilst pulling the tube out.

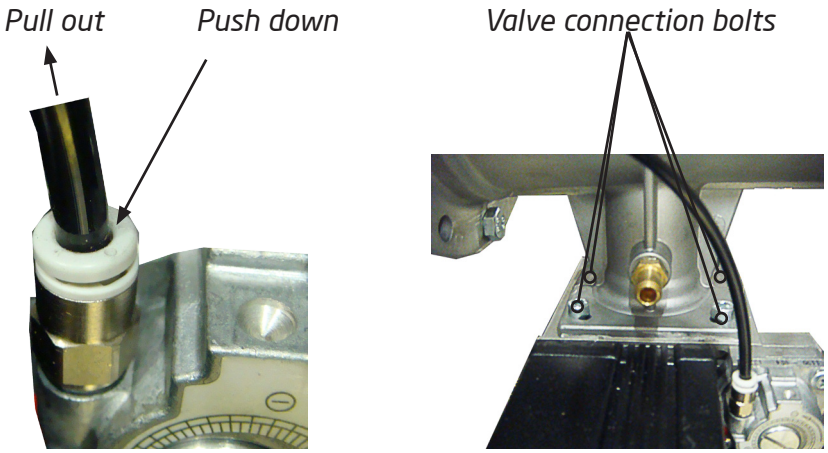

- Remove power connector and the two connections onto the minimum gas pressure switch.
- Isolate the gas supply.
- Remove the 4 bolts connecting the valve to the venturi (top of valve) and the 4 bolts connecting the gas valve to the gas pipe (bottom of valve)
- Carefully slide out valve
- Replacement is the reverse - Refit with new O rings
- Recommission gas burner (see section 6.4)

7.3.15 Air Control Valve

- *Remove fan (see section 7.3.13)*
- Disconnect the six way electrical connection underneath the air control valve.
- Unscrew the five screws securing the air control valve to the door and remove the air control valve.

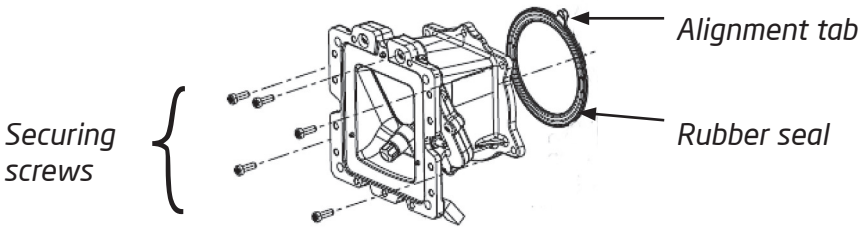

- Inspect condition of rubber seal and replace if worn or damaged. Ensure that the seal is correctly located with its tab in alignment inside the aluminium cut out on the door.
- Replacement is the reverse

7.3.16 Burner Head Removal with Fan removed (see section 7.3.12)

- *See section 7.2 (items 1, 2, 3 & 4) for access*
- Disconnect the overheat stat, spark lead, ionisation lead, earthing cable and six way electrical connector to the air control valve.
- Remove the six bolts securing the burner assembly and door to the heat exchanger and pull out the complete burner assembly and air control valve.

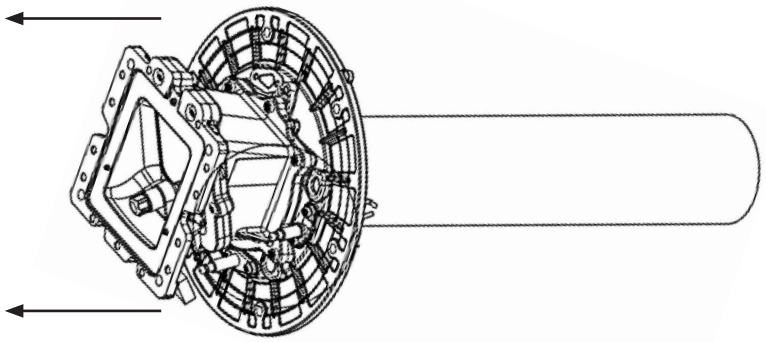

- Check for damage or severely burnt areas along the burner tube. Use a vacuum cleaner or nonmetallic brush on the inside of the tube only. Do not use a brush to clean the outside of the burner tube.
- Access is now available for heat exchanger inspection (see section 7.3.17)
- If necessary replace burner tube by removing the air control valve (see section 7.3.14) and pulling out the old tube. Inspect condition of rubber seal and replace if worn or damaged. Ensure that the seal is correctly located with its tab in alignment inside the aluminium cut out on the door.
- Re-assembly is the reverse

7.3.17 Burner Head Removal with Air Control Valve removed (see section 7.3.14)

- *See section 7.2 (items 1, 2, 3 & 4) for access*
- Carefully pull burner tube from door assembly

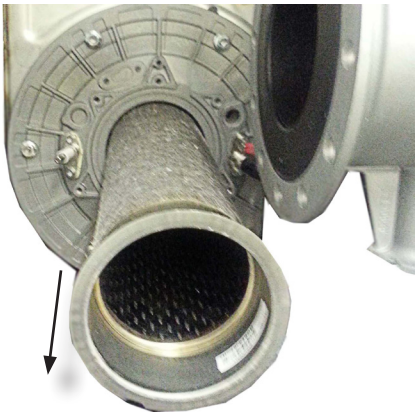

- Check for damage or severely burnt areas along the burner tube. Use a vacuum cleaner or nonmetallic brush on the inside of the tube only. Do not use a brush to clean the outside of the burner tube.
- Access is now available for heat exchanger inspection (see section 7.3.18)
- If necessary replace burner tube
- Re-assembly is the reverse

7.3.18 Heat Exchanger Inspection and Cleaning

- With the heat exchanger door in place and the burner tube removed or with the door entirely removed, use a torch to examine the inside of the heat exchanger.

Inspection with door in place

- The heat exchanger should be bright and free from deposits or major patches of discolouration.
- If necessary deposits can be removed (see section 7.3.15 for door removal) with a nylon brush. Loose deposits can either be vacuumed out or water used to flush the deposits into the condense drain.
- For stubborn deposits apply white vinegar to the coils, using a hand sprayer and leave for 3 minutes. Remove deposits using a nylon brush and rinse with plenty of clean water (repeat if necessary).
- Inspect condition of door seals and replace if there is any sign of wear or damage.

Do not use chemical treatments to clean out deposits from the heat exchanger. Use only clean water or white vinegar as instructed above.

When using water to flush through the heat exchanger, ensure that water exposure to the insulation material at the end of the heat exchanger is minimised to prevent damage to this insulation.

7.3.19 Rear Heat Exchanger Insulation Replacement

Specialist equipment is required to replace the rear insulation, contact the manufacturer on **0845 070 1055** for advice.

7.4 COMPONENTS PARTS LIST

Item	Description	Part No
1	Air control valve assembly kit c/w reed switch	5142119
2	Automatic air vent	5142120
3	FS400 Burner assembly (Bluejet)	5142121
4	FS525 Burner assembly (Bluejet)	5142158
5	Burner gasket	5142122
6	Burner door nut set (6 nuts)	5142123
7	Burner door overheat protection device (260^{0}C)	5142124
8	Burner door silicone lip gasket	5142125
9	Burner door insulation	5142126
10	Condensate / Flue blockage pressure switch	5142127
11	Condensate trap	5142128
12	Condensate tube assembly	5142129
13	Fan	5142130
14	Fan bolt set (10 bolts)	5142131
15	Fan / Air control valve gasket	5142132
16	Flow overheat protection device (110^{0}C)	5142133
17	Temperature sensor (screw in)	5142134
18	Gas valve c/w seals	5142135
19	Heat exchanger rear overheat protection fuse (318^{0}C)	5142136
20	HMI display screen	5142137
21	Ionisation electrode c/w gasket & screws	5142138
22	Ionisation electrode lead	5142139
23	LMS14 PCB 1&2 (FS400)	5142140
24	LMS14 PCB 1&2 (FS525)	5142141
25	LMS14 Interface PCB	5142142
26	PCB1 Multi- connection cable (HMI & AGU2.5)	5142143
27	PCB2 Connection cable	5142144
28	OCI345 Communication device c/w cable	5142145
29	Power switch	5142146
30	Reset switch	5142147
31	Spark electrode lead	5142148
32	Spark electrode c/w gasket & screws	5142149
33	Spark generator	5142150
34	Water pressure transmitter	5142151
35	Upper copper gas pipe assembly	5142152
36	Lower copper gas pipe assembly	5142153
37	Gas manifold assembly	5142159
38	FS400 Flow & Return pipe work c/w couplers	5142155
39	FS525 Flow & Return pipe work c/w couplers	5142157
40	FS400 Heat exchanger	*
41	FS525 Heat exchanger	*
42	Din Rail Mounted Relay 230VAC c/w base	5142638
43	Din Rail Mounted Relay 12VDC c/w base	5142639
44	AGU 2.5 Clip-In Extension	5139793

** The heat exchanger for this boiler weighs in excess of 150kg. In the interests of manual handling and personal safety, specialist lifting equipment is needed should a part change be required. Please contact our service team on 0845 070 1058 for support*

7.5 COMPONENT ILLUSTRATIONS

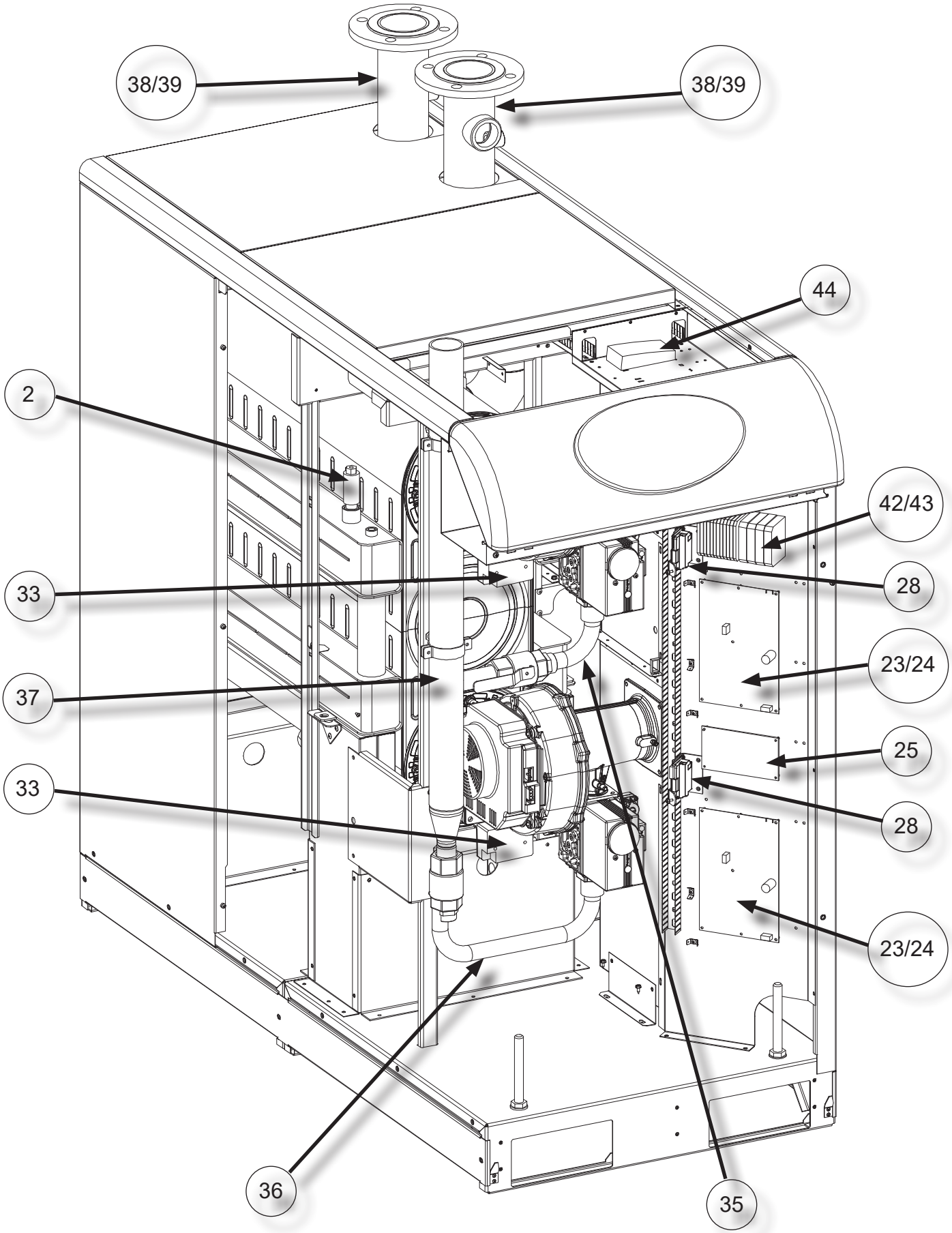

7.5 COMPONENT ILLUSTRATIONS (CONTINUED)

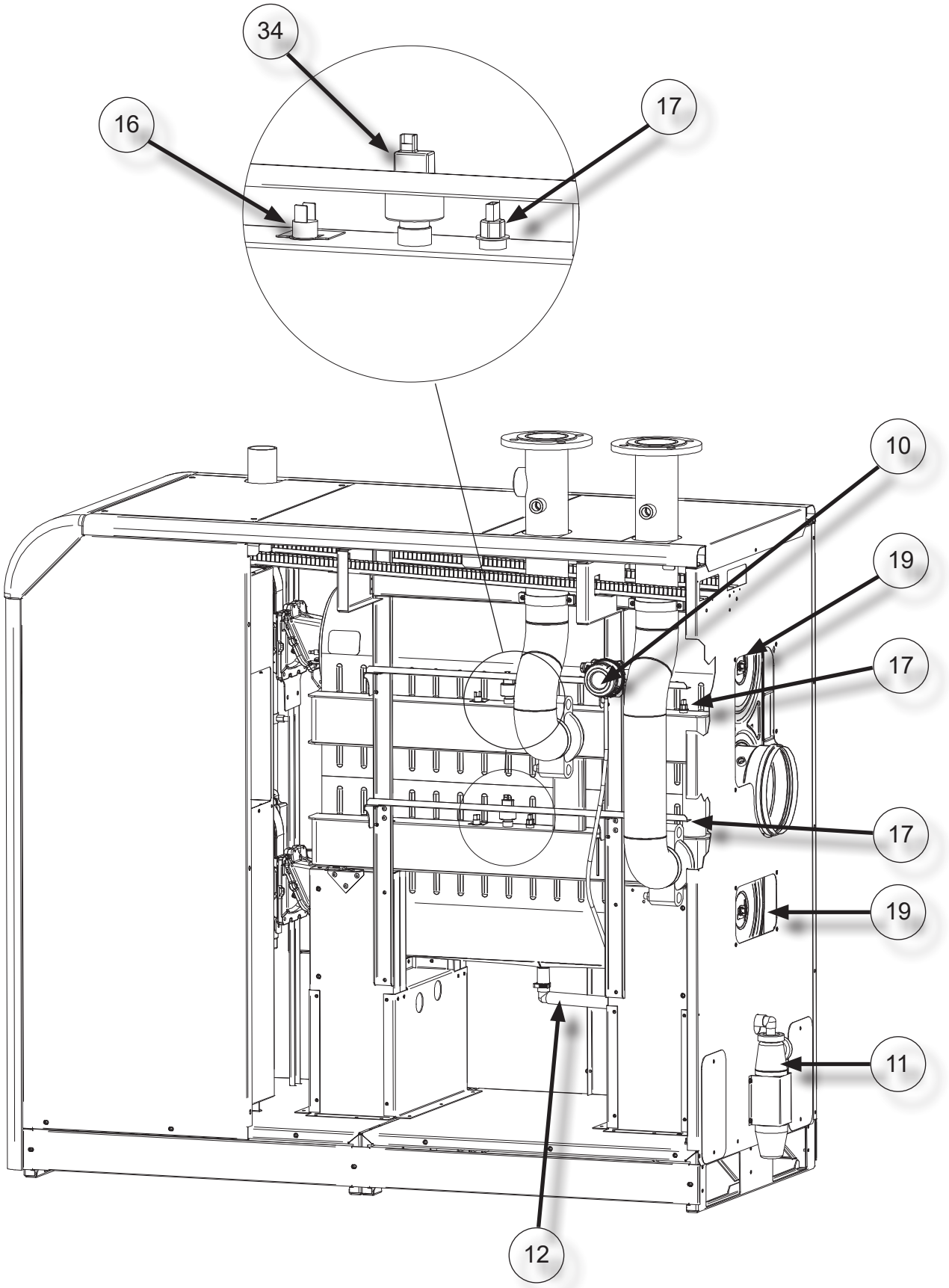

7.5 COMPONENT ILLUSTRATIONS (CONTINUED)

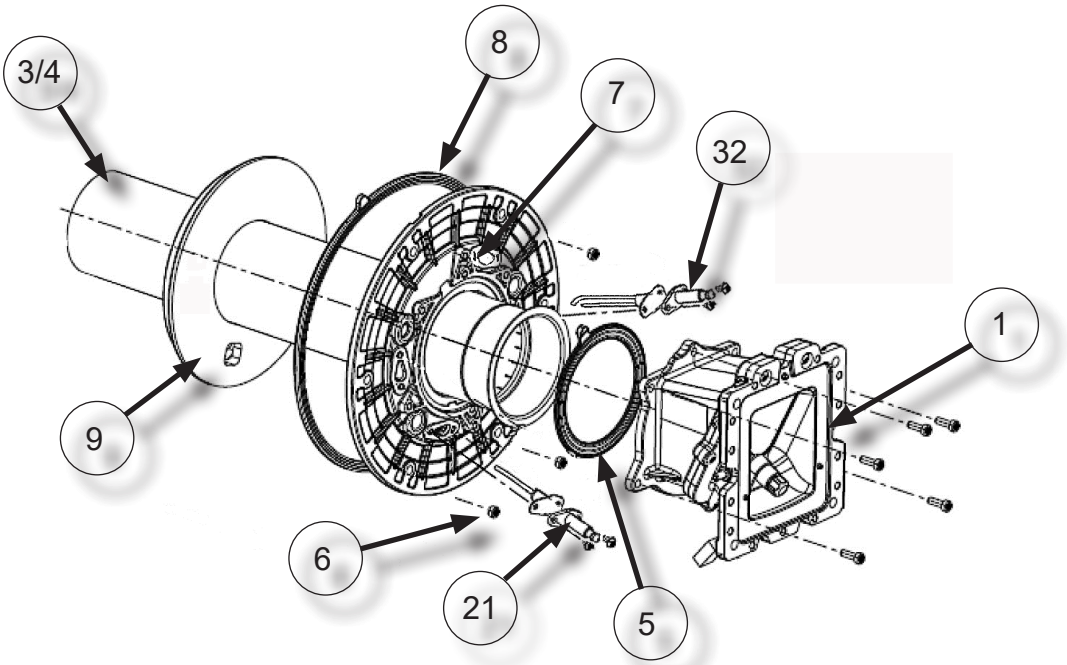

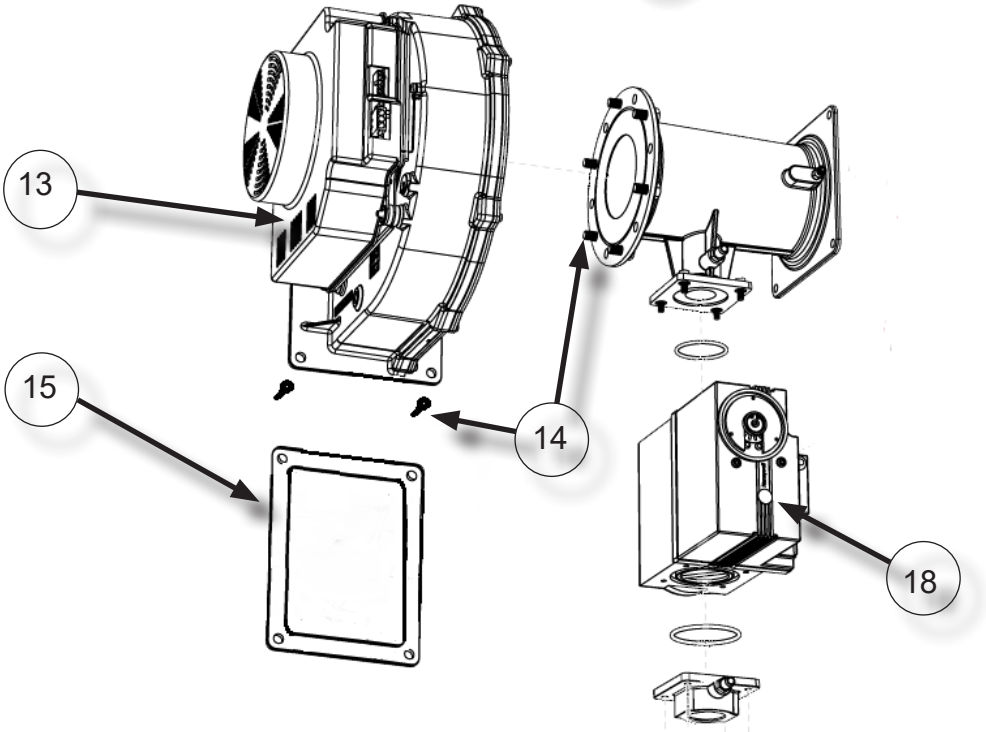

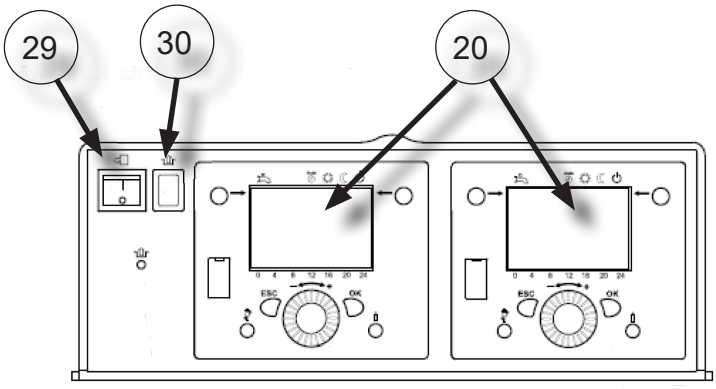

7.6 RECOMMENDED PARTS LIST

7.6.1 Minimum recommended spares requirements

As with all boilers, most wear occurs on the components containing moving parts that are in regular use. The following items, although having a long service life, can fail without warning, resulting in boiler stoppage. In order to facilitate the fastest possible recovery time in the unlikely event of sudden failure.

It is recommended that spares are carried for these components:-

- 13 - Combustion fan
- 18 - Gas valve
- 23 - LMS14 Control PCB 1 & 2 (FS400)
- 24 - LMS14 Control PCB 1 & 2 (FS525)
- 32 - Spark electrode c/w gasket and screws
- 21 - Ionisation electrode c/w gasket and screws
- 44 - AGU2.5 Clip in Extension

7.6.2 First Aid Kit

A First Aid Kit has been designed to include a selection of the major spare parts for each model. These items are available to order as a single item 5103929 (FS400) & 5103930 (FS525) from the manufacturer. All items in each First Aid Kit are listed in section 7.6.3 with photos of each item.

7.6.3 First Aid Kit Parts List

Item	Description	Part No
1	Air control valve assembly kit c/w reed switch	5142119
5	Burner gasket	5142122
7	Burner door overheat protection device (260°C)	5142124
10	Condensate / Flue blockage pressure switch	5142127
13	Fan	5142130
15	Fan / Air control valve gasket	5142132
16	Flow overheat protection device (110°C)	5142133
17	Temperature sensor (screw in)	5142134
18	Gas valve c/w seals	5142135
19	Heat exchanger rear overheat protection fuse (318°C)	5142136
20	HMI display screen	5142137
21	Ionisation electrode c/w gasket & screws	5142138
23	LMS14 PCB 1&2 (FS400 Kit only)	5142140
24	LMS14 PCB 1&2 (FS525 Kit only)	5142141
25	LMS14 Interface PCB	5142142
28	OCI345 Communication device c/w cable	5142145
31	Spark electrode lead	5142148
32	Spark electrode c/w gasket & screws	5142149
33	Spark generator	5142150
34	Water pressure transmitter	5142151
42	Din Rail Mounted Relay 230VAC c/w base	5142638
43	Din Rail Mounted Relay 12VDC c/w base	5142639
44	AGU 2.5 Clip-In Extension	5139793

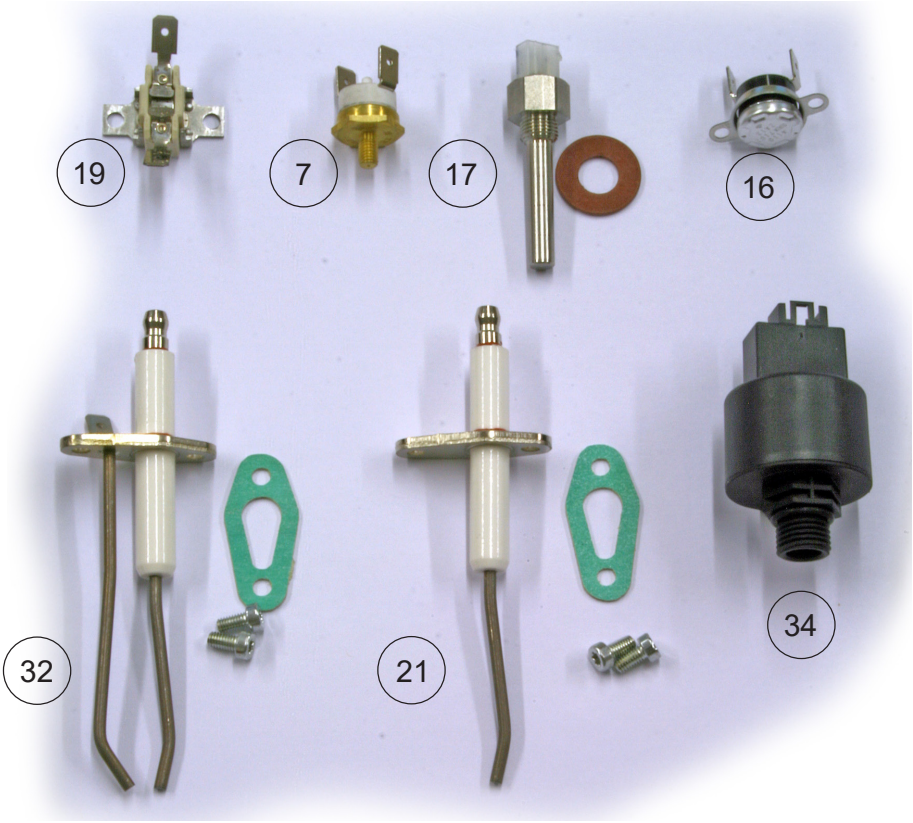

7.6.3 First Aid Kit Parts List (continued)

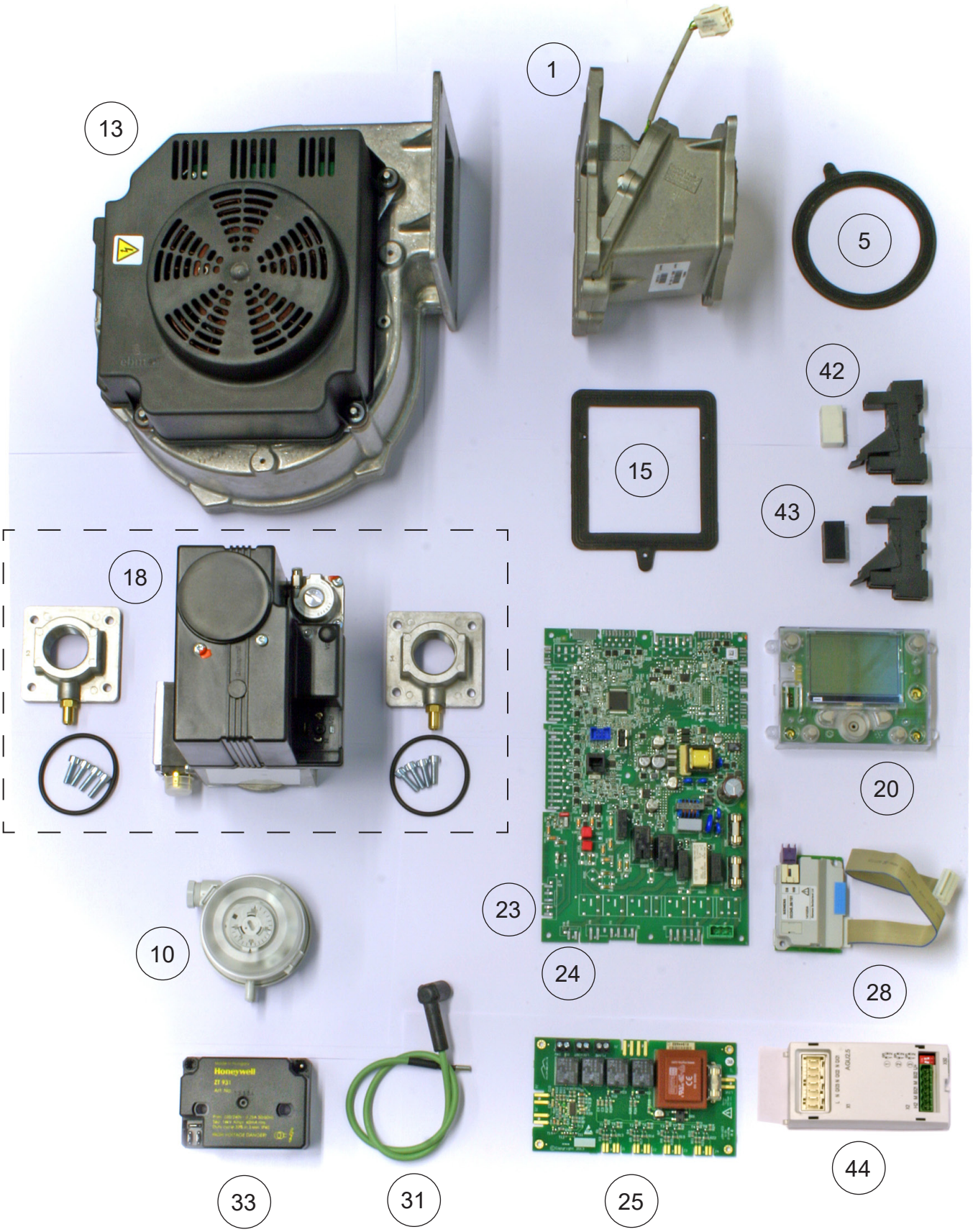

7.7 FAULT CODE TABLE

Code	Display Description	Causes / Rectification
10	Outside temperature sensor error	Check connections or replace faulty outside sensor (B9). If no outside sensor fitted save sensors (function 6200) to remove error after 24 hours
20	Boiler temperature 1 sensor error	Check connections or replace faulty heat exchanger flow temperature sensor (B2)
22	Water pressure 3 too low	Water pressure is near critical level, re pressurise system to a minimum of 1 bar
26	Common flow temperature, sensor error	Check connections or replace faulty sensor located in flow pipe work up stand section (B10)
40	Return temperature 1, sensor error	Check connections or replace faulty heat exchanger return temperature sensor (B7)
47	Common return temperature, sensor error	Check connections or replace faulty sensor located in return pipe work up stand section (B73)
50	DHW temperature 1, sensor error	Check connections or replace faulty DHW tank sensor (B3)
60	Room temperature 1, sensor error	Check connections or replace faulty room unit (R1)
81	LPB short-circuit or no power supply	Check operation of LPB bus units and cables
83	LPB collision	Duplicate LPB address - Check all LMS14s function Para 6600
84	BSB address collision	Two room units have the same allocation address - see function 40
98	Extension module 1, error	AGU2.5 configuration error - Check parameters
99	Extension module 2, error	AGU2.5 configuration error - Check parameters
100	2 Clock time masters	Only PCB1 should be set as time master, check all LMS14s - see Function 6640
110	SLT Lockout	Overheat protection has been activated. Allow appliance to cool down before resetting. If problem persists, establish causes of overheating before resetting appliance or replacing thermal fuses and rectify overheat devices. Also check connector X18a and all flow & return sensors.
111	Shutdown limit thermostat	Heat exchanger temperatures have been exceeded. Investigate flow speeds and controls to determine causes of temporary fault code.
119	Shutd water pressure swi	Check pressure switch operation or refill system with water
125	Maximum boiler temperature exceeded	Flow temperatures have been exceeded. Boiler will continue once temperatures have dropped below maximum allowed limits.
126	DHW Charging temperature not reached	Check operation and heat up times for DHW
127	DHW legionella temperature not reached	Check operation and heat up times for DHW
128	Loss of flame during operation	Ionisation current lost after successful ignition. Check gas supply pressure, ionisation electrode and CO^2 levels at min and max output.
129	Wrong air supply	The air control valve has opened when the burner is not in operation. Check the operation of the air control valve and the flue draught does not exceed 0.2 mbar (see section 5.5.2)
130	Flue gas temperature too high	Check causes of high temperatures before operating boiler. Inspect inside of heat exchanger for dirt build up. Check CO^2 levels at min and max output.
132	Safety Shutdown	Gas pressure too low or front door overheat thermostat activated. Check incoming gas pressure and operation of overheat stat on the screwed into the burner door.
133	Safety time exceeded	Ignition unsuccessful after 5 ignition attempts. Check gas supply, gas valve operation, ignition generator, lead and electrodes.

7.7 FAULT CODE TABLE (CONTINUED)

Code	Display Description	Causes / Rectification
151	BMU internal error	Switch power off and then back on to appliance. Reset appliance If problem persists, check polarity to appliance is not reversed. Replace LMS14 PCB.
152	Parameterization error	Incorrect / Conflicting parameters input. Review the last revised parameters input to locate conflict.
153	Unit Locked	Reset button has been pushed in for more than 10 seconds. Push reset for 1 - 2 seconds to reset the fault. If symptoms persist check reset button operation and if OK, replace LMS14 Interface PCB.
160	Fan speed threshold not reached	Required fan speed not reached - Check fan connections or replace faulty fan unit.
162	Air pressure switch	Air control valve operation (opening) has not been detected by the control system, after the fan has switched on. Check the operation of the air control valve , position sensor, relays and check for flue blockage.
164	Flow pressure switch HC	Check for condensate blockage, flue blockage or restriction and pressure switch operation. Check pressure switch value is 100 Pa above the maximum pressure generated inside the flue system, when the boiler is operating from cold.
166	Air Pressure Switch	Air control valve operation (closing) has not been detected by the control system, after the fan has switched off. Check the operation of the air control valve, position sensor, relays and check the flue draught does not exceed 0.2 mbar (see section 5.5.2)
192	Start Prevention	The burner interlock system, prevents the operation of an individual burner, if the Air Control Valve on the opposite burner is open and the burner is in a lockout condition. Check operation of the air control valve, position sensor, relays and check the flue draught does not exceed 0.2 mbar (see section 5.5.2)
218	Pressure supervision	Water pressure inside boiler is low but not yet critical. Boiler will continue to operate but at 80% of maximum output. Full output power will not be available until the water pressure is at or above minimum levels *(see 3.2)*
323	Water press 3 too low	Water pressure inside boiler is too low for safe operation. Operation will automatically resume once water pressure is at or above minimum levels *(see 3.2)*

sales 0345 070 1055
technical 0345 070 1057
web pottertoncommercial.co.uk

Registered office address: Baxi Heating UK, Coventry Road, Warwick, CV34 4LL